Appendix E: Edge® Ti

Overview

The Edge Ti shape cutting control is an extremely versatile product offering up to four configurable axes of motion, built-in Servo Amplifiers and configurable I/O. Use of built in relay contacts for I/O increases interface options and minimizes external interface components.

Hypertherm Automation PC based CNC controls for the shape cutting industry utilize our proprietary Graphical User Interface (GUI), and *SoftMotion* Technology to increase productivity, reduce operational costs while providing unsurpassed operational flexibility. The control features may be further expanded through use of integrated Sensor™ THC interface and networking

Edge Ti™

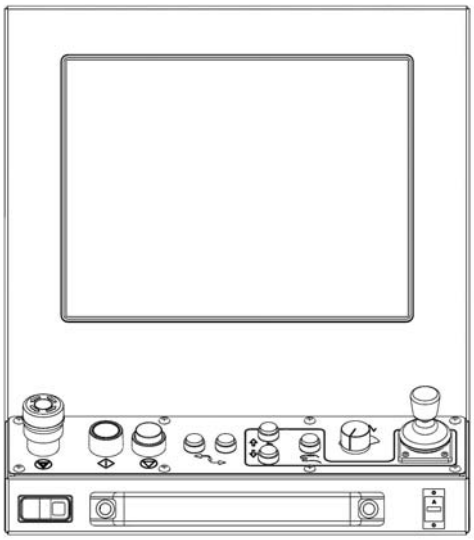

Touch Screen
The 15” display used in the Edge Ti is a patented IntelliTouch Surface Wave technology which provides precise drift free touch accuracy and unsurpassed clarity. Pure glass construction with tiny transducers on the back of the touch screen preserves color purity and works even if scratched. There is no known wear out mechanism as there are no layers, coatings or moving parts. IntelliTouch technology has been tested by the supplier for more than 50 million touches in one location without failure.

Rear View

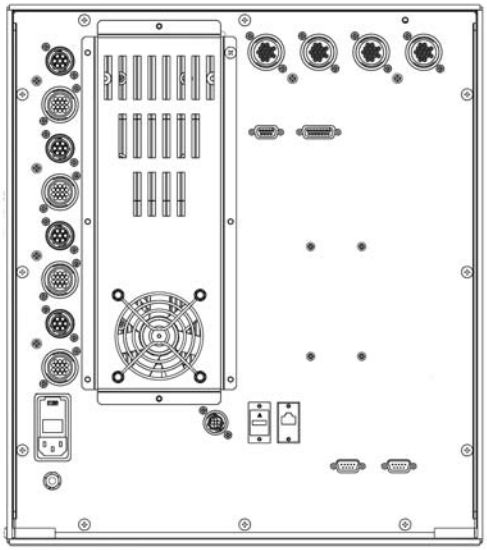

THC, Joystick & Speedpots
Features for Joystick and Speedpots are offered as standard. Optional features for integrated Sensor THC are available.

Note: Use of some devices such as USB memory devices may require loading of a device driver for operation. Many standard device drivers are located in the C:\CABS or D:\CABS\I386 folders.

Operation and maintenance of automated equipment involves potential hazards. Personnel should take precautions to avoid injury. This equipment should only be opened by trained service personnel.

Machine Interface

The information provided here is the basic information for connection of the shape cutting control to the cutting table. Each machine interface will vary slightly based on the cutting table configuration and features. Additionally, I/O pinout information may vary slightly based on the configuration of the selected I/O and their locations. Changes to the I/O configuration may be made in the password protected I/O screen. All controls are shipped with a default selection of Inputs and interface locations for the selected control Interface (I/O) configuration. Installation and service should only be performed by a qualified service technician.

The rear panel of the control has several cable connectors to connect the control to power, I/O and communication ports. These connectors are clearly labeled as to their function.

AC Input
The AC power cable is inserted into the AC power connector and plugged into a standard 3-way 115 or 230 volt outlet. The AC Power connector contains an integral fuse module and line filter. AC input power can be selected by the user by changing position of the fuse module so that the selected voltage is displayed.

A remote communications link can be connected to one of the two serial ports and an external ground (PE) lug for earth grounding of the unit is also provided.

Serial Port
Please refer to the Ports Information section of the Installation Guide for additional information on configuration of Serial ports for communication. Note: Serial ports for the MicroEDGE are not optically isolated. Appropriate grounding or after market port isolator or protocol converter to add optical isolation is recommended.

I/O Configuration

The Edge – Ti provides several options for I/O interfacing with built in circuitry providing interface flexibility and reducing the need for external components. Inputs are through optoisolators and outputs are through relays. Contacts for both normally closed and normally open outputs are available for use.

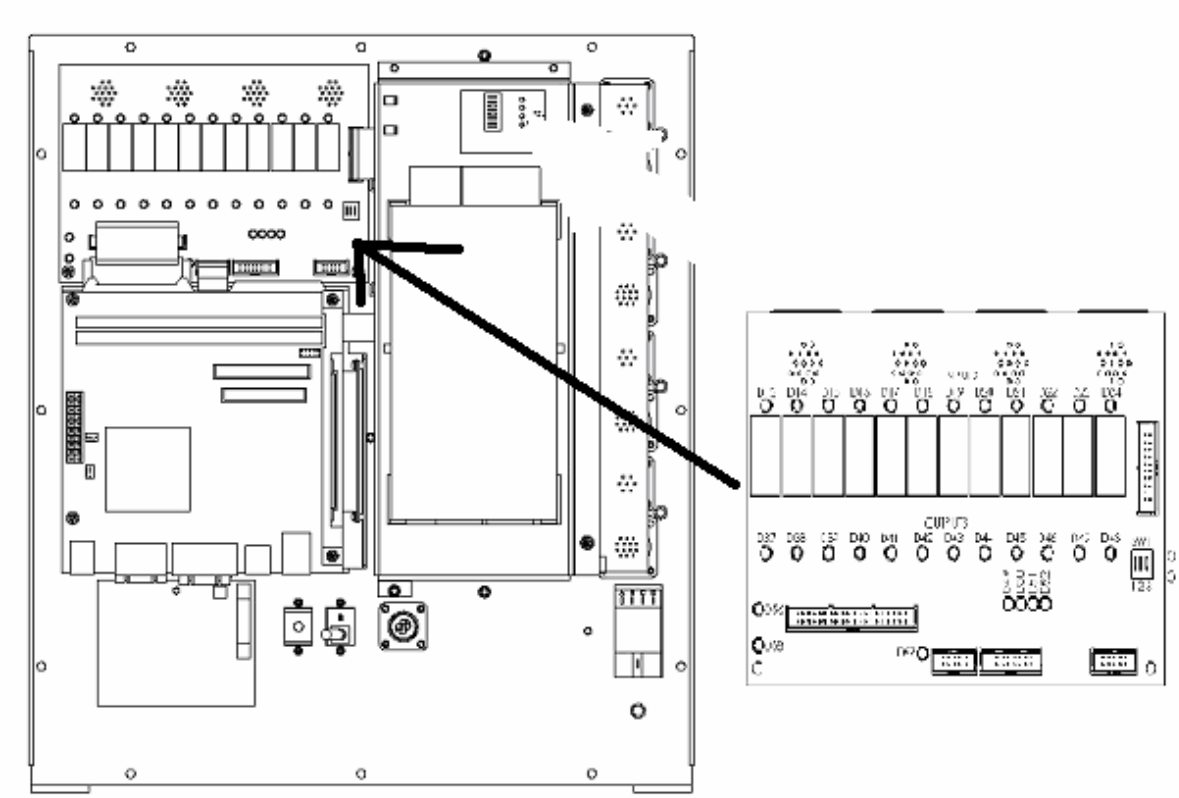

Note that the inputs have two different modes that are selectable using DIP switch SW1-3. When this switch is OFF the inputs are in the normal mode and an external voltage source of between 12V and 24V is required to activate the input.

When DIP switch SW1-3 is ON, the inputs are all in the dry contact mode and require an external switch to common to activate the inputs. The normal logic states are reversed between the two input modes.

In the normal mode an inactive input will produce a logic low and an active input will produce logic high. In dry contact mode these logic levels are reversed with an inactive input producing logic high and an active input producing a logic low.

I/O Interface

The following illustration shows the details of connecting the I/O to common circuitry. All outputs are relay contacts rated at 1 AMP 250VAC maximum

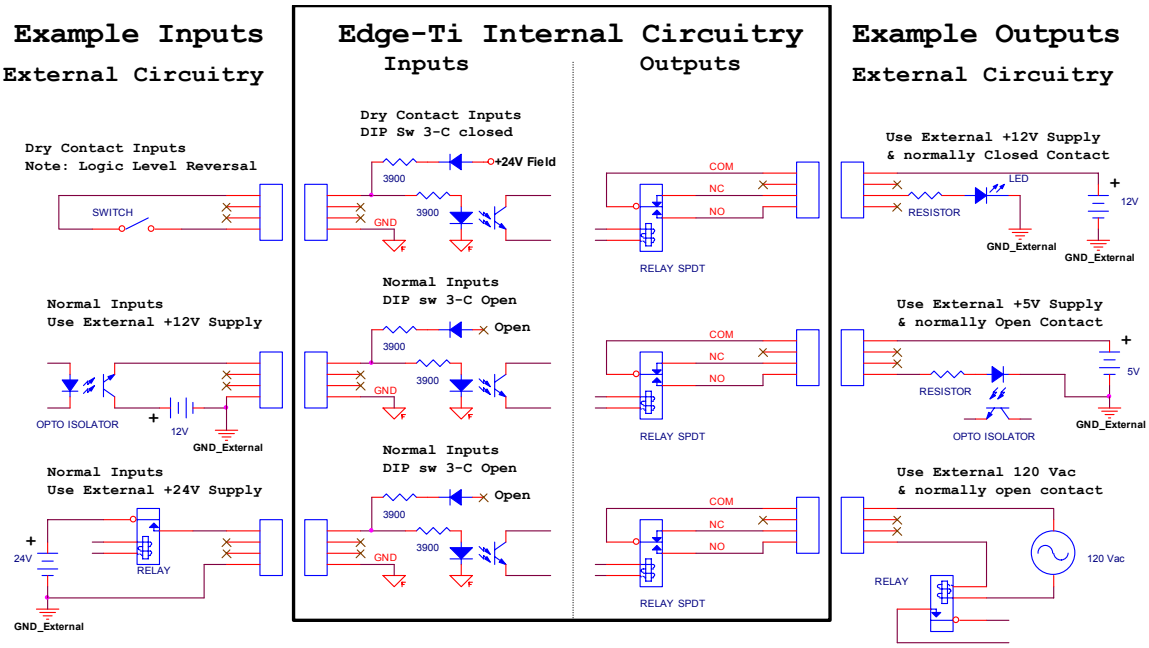

WARNING! Do not exceed 24Vdc or 10mA into any optoisolator input. Use care to observe the correct signal polarities or damage may occur! Do not exceed 250 Vac or 1 Amp through any relay output.

I/O Pinout
4 Inputs/outputs per connector

Connector I/O 1-3

Pin#	Signal
1	OUT1 COM
2	OUT1 NC
3	OUT1 NO
4	OUT2 COM
5	OUT2 NC
6	OUT2 NO
7	OUT3 COM
8	OUT3 NC
9	OUT3 NO
10	IN1
11	IN1 COM
12	IN2
13	IN2 COM
14	IN3
15	IN3 COM
16	Cable Shield

Connector I/O 4-6

Pin#	Signal
1	OUT4 COM
2	OUT4 NC
3	OUT4 NO
4	OUT5 COM
5	OUT5 NC
6	OUT5 NO
7	OUT6 COM
8	OUT6 NC
9	OUT6 NO
10	IN4
11	IN4 COM
12	IN5
13	IN5 COM
14	IN6
15	IN6 COM
16	Cable Shield

Connector I/O 7-9

Pin#	Signal
1	OUT7 COM
2	OUT7 NC
3	OUT7 NO
4	OUT8 COM
5	OUT8 NC
6	OUT8 NO
7	OUT9 COM
8	OUT9 NC
9	OUT9 NO
10	IN7
11	IN7 COM
12	IN8
13	IN8 COM
14	IN9
15	IN9 COM
16	Cable Shield

Connector I/O 10-12

Pin#	Signal
1	OUT10 COM
2	OUT10 NC
3	OUT10 NO
4	OUT11 COM
5	OUT11 NC
6	OUT11 NO
7	OUT12 COM
8	OUT12 NC
9	OUT12 NO
10	IN10
11	IN10 COM
12	IN11
13	IN11 COM
14	IN12
15	IN12 COM
16	Cable Shield

I/O Mating Connector
The I/O connector is a standard sex circular CPC connector from AMP
Connector AMP 16C #206037-1
Backshell AMP #206070-1
Sockets 20-24AWG AMP #66105-3

Shared Inputs
Note that that inputs #11 and #12 are shared with the Lifter Interface Limit Switch inputs. These two inputs can only be used as general purpose inputs if they are **NOT** used by the Lifter Interface limit switches.
If you are using the Lifter Interface and limit switches are connected to these inputs you must set DIP switches SW1-1 and SW1-2 to ON and you should not connect to inputs #11 and #12. Note that the standard Hypertherm Lifter does not use limit switches and the DIP switches SW1-1 & SW1-2 should be OFF so that inputs #11 and #12 can be used.

Front Panel I/O
Edge TI has dedicated I/O for operation of front panel switches.

Input #	Description
24	Front Panel Start
25	Front Panel Stop
26	Front Panel Forward on Path
27	Front Panel Forward on Path
28	Raise Torch 1
29	Lower Torch 1
30	Front Panel Manual
31	Front Panel E-Stop

For proper operation, these inputs should not be reassigned.

Lifter Interface

Edge Ti offers the option of an integrated Sensor THC. The lifter interface connector is provided for this use.

Pinout:

Pin#	Description
1	Field +12VDC
2	Lower Limit
3	Upper Limit
4	Breakaway (Torch Collision)
5	Field Common
6	Field Common
7	Contact Sense
8	Contact Sense
9	Contact Sense

Shared Inputs
Note that that inputs #11 and #12 are shared with the Lifter Interface Limit Switch inputs. These two inputs can only be used as general purpose inputs if they are **NOT** used by the Lifter Interface limit switches.

If you are using the Lifter Interface and limit switches are connected to these inputs you must Close DIP switches SW1-1 and SW1-2 and you should not connect to inputs #11 and #12. Note that the standard Hypertherm Lifter does not use limit switches and the DIP switches SW1-1 & SW1-2 should be left open so that inputs #11 and #12 can be used.

Plasma Interface

A plasma interface is provided as standard to

Plasma Interface Pinout

Pin#	Description
1	Field +12VDC
2	Field +12VDC
3	Plasma Start (Cut Control)
4	Plasma Start (Cut Control)
5	Hold Ignition
6	Hold Ignition
7	Transfer (Cut Sense)
8	Transfer (Cut Sense)
9	Field Common
10	Field Common
11	Field Common
12	Field Common
13	Field Common
14	Arc Voltage – Electrode
15	Arc Voltage – Work

Mating Connector
Connector AMP #
Backshell AMP #
Sockets AMP

External Interlock

An external interlock is provided for added safety.

Interlock Pinout

Pin#	Description
1	Interlock Relay Coil
2	GND
3	GND
4	+24VDC (50 milliamps maximum)

Additional Notes:

1. For Servo Drive Amplifiers to operate, Pin 1 must be connected to GND Pin 2, typically through a remote mushroom type switch. If no remote switch is to be used, connect pin 1 to pin 2 with a jumper or the servo drives will not power on.
2. 24VDC is provided for use to activate the digital inputs only in the case where, it must not be used for any other auxiliary purpose.

Mating Connector
Connector AMP #206060-1
Backshell AMP #206062-3
Sockets 20-24AWG AMP #66105-3

Motor Encoder Connections
Edge Ti supports DC brush and brushless motors. Switch SW1 on the drive interface can be used to select motro type being used. Please note the location and setting in the following illustration.

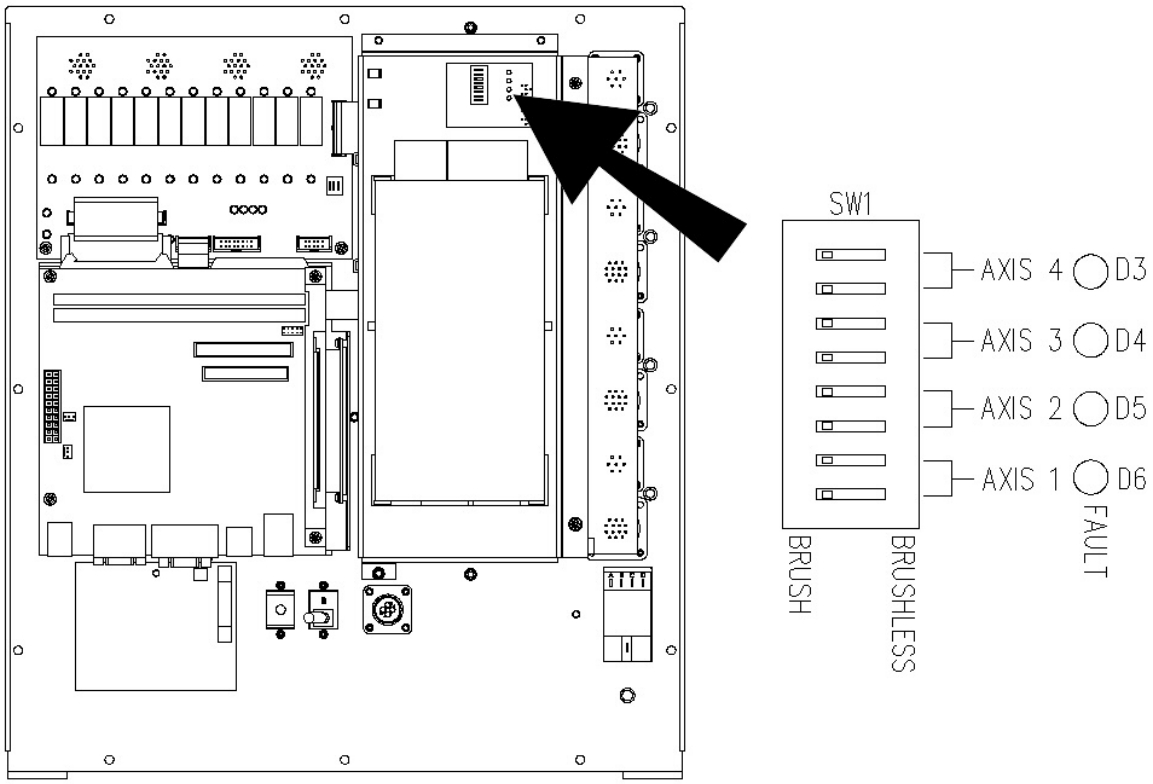

Axes Assignments

Axes	**Axes Assignment**
1 (X)	Transverse or Rail
2 (Y)	Transverse or Rail
3 (Z)	Dual Gantry, CBH, Rotate or THC
4 (W)	CBH, Tilt or THC

Motor Pinout

Pin#	Description
1	Brushless Motor-A or Brush +
2	Brushless Motor-B or Brush -
3	Brushless Motor-C
4	Brake + (24VDC, 250ma max)
5	Brake -
6	no connect
7	Cable Shield

Additional Notes:
1. Brake output is limited to 250ma total.

Drive Motor Mating Connector
Connector AMP #211399-1
Backshell AMP #206966-1
Sockets 16-18AWG AMP #66101-3
Cabling: Use Belden # 9501 or equivalent for drive signals

Encoder Pinout:

1	Encoder +5V
2	Encoder GND
3	Encoder Channel A
4	Encoder Channel A/
5	Encoder Channel B
6	Encoder Channel B/
7	Encoder Channel Z
8	Encoder Channel Z/
9	+V Hall Out (6V @ 30MA max)
10	Hall GND
11	Hall – A
12	Hall - B
13	Hall - C
14	Cable Shield

Additional Notes:
1. Only 5 Volt encoders are supported.
2. Hall Sensors are used with Brushless motors only.
3. Inside the Edge Ti, a dipswitch is used to select Brush or Brushless mode, 2 switches per axis. Can mix Brushed and Brushless if switches are set properly.
4. For optimum noise immunity, cable shields may be tied externally to the control enclosure.

Encoder Mating Connector and Cable
Connector AMP #206044-1
Backshell AMP #206070-1
Pins (20-14AWG) AMP #66103-3
Cabling: Use Belden # 9504 or equivalent for encoder signals

Connector Kits

CONN-0161 interlock kit

Qty	PN	Desc
1	CONN-0159	plug
1	CONN-0160	cable clamp
4	CONN-0037	crimp sockets

CONN-0162 I/O kit

Qty	PN	Desc
4	CONN-0075	plug
4	CONN-0063	cable clamp
70	CONN-0037	crimp sockets

CONN-0163 Motor/Encoder connector kit

Qty	PN	Desc
1	CONN-0158	plug
1	CONN-0049	cable clamp
7	CONN-0050	crimp sockets
1	CONN-0062	plug
1	CONN-0063	cable clamp
16	CONN-0053	crimp pins