COUNTRY™ COLLECTION WOOD-BURNING STOVES

Country™ Collection wood-burning stoves offer the ultimate in clean-burning, reliable heat to warm your home and your family.

LENNOX

HEARTH PRODUCTS
Innovation never felt so good.™

COUNTRY™ COLLECTION

Canyon™ ST310 *shown with 24K gold-plated Olympic legs, gold-plated Traditional door, deco trim and custom-painted exterior (see your local dealer for information on custom paint).*

■ The Country™ Collection line of wood-burning stoves offers a complete selection of products to fit your heating needs. Each stove is customizable with an array of door finishes, leg or pedestal options, and an optional heat-circulating blower. In addition, every wood stove that leaves our plant is built with premium-grade materials and the utmost commitment to quality. We incorporate innovative technology and designs to make Country Collection wood-burning stoves among the most beautiful, efficient, reliable, and environmentally friendly products on the market today. ■

Striker™ S160 *shown with Pedestal base and 24K gold-plated Traditional door.*

Legacy™ S260 *shown with Pedestal base, 24K gold-plated Traditional door and custom-painted exterior (see your local dealer for information on custom paint).*

STRIKER™ S160 – Small

700–1,400-SQ.-FT. HEATING CAPACITY

SPECIFICATIONS

Log Length		18" max.
Stovepipe Diameter		6"
Height	On Legs	27-1/2"
	On Pedestal	31"
Width		23-1/2"
Approximate Weight		310 lbs.
EPA Grams Per Hour		1.6
Firebox		18"W x 14"D
Oregon DEQ Efficiency		70.2%
Heating Capacity*		700–1,400 sq. ft.
Max. Output*		68,000 BTUs/hr.
Max. Burn Times*		6–8 hrs.

Striker™ SA160 *shown with 24K gold-plated Arch door and gold-plated Olympic legs.*

The classic styling of the Striker™ S160 is surpassed only by its performance. The smallest wood stove of the group and one of the cleanest-burning non-catalytic stoves in the world, the Striker provides a lot of heat with very low emissions. Available with your choice of an Arch or Traditional door in a variety of finishes.

Striker S160 *shown with black Traditional door and Cascade legs.*

PERFORMER™ SS210/ST210 – Medium

1,200–2,000-SQ.-FT. HEATING CAPACITY

SPECIFICATIONS

Log Length		20" max.
Stovepipe Diameter		6"
Height	On Legs	30-3/8"
	On Pedestal	33-7/8"
Width		25-1/4"
Approximate Weight		436 lbs.
EPA Grams Per Hour		4.2
Firebox		20"W x 18"D
Oregon DEQ Efficiency		67.1%
Heating Capacity*		1,200–2,000 sq. ft.
Max. Output*		76,000 BTUs/hr.
Max. Burn Times*		7–9 hrs.

Performer™ SS210 *shown with 24K gold-plated Traditional door and gold-plated Olympic legs.*

Available as both a classic T-top and a more contemporary Step-top, the Performer™ is one of the most versatile wood stoves in the Country™ Collection. Whichever version you choose, the Performer SS/ST210 is perfect for your moderate heating needs.

Performer ST210 *shown with nickel-plated Arch door and black Olympic cast legs.*

**Square-feet heating capacities and burn times are approximations only. Actual performance may vary depending upon home design and insulation, ceiling heights, climate, condition and type of wood used, appliance location, burn rate, accessories chosen, chimney installation and how the appliance is operated.*

LEGACY™ S260 – Large

1,600–2,500-SQ.-FT. HEATING CAPACITY

SPECIFICATIONS

Log Length		22-1/2" max.
Stovepipe Diameter		6" or 8"
Height	On Legs	33"
	On Pedestal	36-1/2"
Width		28"
Approximate Weight		487 lbs.
EPA Grams Per Hour		4.1
Firebox		22-1/2"W x 17-1/2"D
Oregon DEQ Efficiency		68.2%
Heating Capacity*		1,600–2,500 sq. ft.
Max. Output*		79,000 BTUs/hr.
Max. Burn Times*		7–11 hrs.

Legacy™ S260 *shown with brushed nickel-plated Traditional door and brushed nickel-plated Olympic legs.*

The Legacy™ S260 is ideal for heating larger areas, up to 2,500 sq. ft. The Legacy S260 will complement any home with its Traditional door and a variety of upgrade options (available on all models). Choose from black, gold-plated, brushed gold-plated, nickel-plated or brushed nickel-plated accents.

Legacy S260 *shown with black Traditional door and Pedestal base.*

CANYON™ ST310 – Extra Large

2,000–3,500-SQ.-FT. HEATING CAPACITY

SPECIFICATIONS

Log Length		22-1/2" max.
Stovepipe Diameter		6" or 8"
Height	On Legs	38-1/2"
	On Pedestal	41-1/2"
Width		28-1/2"
Approximate Weight		519 lbs.
EPA Grams Per Hour		3.2
Firebox		22-1/2"W x 19-1/2"D
Oregon DEQ Efficiency		68.6%
Heating Capacity*		2,000–3,500 sq. ft.
Max. Output*		84,500 BTUs/hr.
Max. Burn Times*		7–12 hrs.

Canyon™ ST310 *shown with nickel-plated Traditional door and black Olympic cast legs.*

The Canyon™ ST310 provides serious heat output and is rated to heat up to 3,500 sq. ft. with burn times of 7–12 hrs. For extra comfort and heat circulation, add an optional 700-CFM blower (available on all free-standing wood-burning models). Available with a Traditional door in a variety of finishes.

Canyon ST310 *shown with brushed gold-plated Traditional door and brushed gold-plated Olympic legs.*

**Square-feet heating capacities and burn times are approximations only. Actual performance may vary depending upon home design and insulation, ceiling heights, climate, condition and type of wood used, appliance location, burn rate, accessories chosen, chimney installation and how the appliance is operated.*

CUSTOMIZE TO YOUR TASTE

STEP 1: STOVE MODEL

Choose the stove that best fits your heating needs.

Striker™ S160
*700-1,400 sq. ft.**

Performer™ SS210
*1,200-2,000 sq. ft.**

Performer™ ST210
*1,200-2,000 sq. ft.**

Legacy™ S260
*1,600-2,500 sq. ft.**

Canyon™ ST310
*2,000-3,500 sq. ft.**

STEP 2: DOOR STYLE AND FINISH

Choose the door style and finish that are right for you. Choose from black, 24K gold-plated, brushed gold-plated, nickel-plated, or brushed nickel-plated.

Traditional Door – Available on S160, SS210, S260, ST310
Black, 24K gold-plated, brushed gold-plated, nickel-plated, or brushed nickel-plated

Arch Door – Available on S160 and ST210 only
Black, 24K gold-plated, brushed gold-plated, nickel-plated, or brushed nickel-plated

STEP 3: ETCHED GLASS (optional)

Opt for standard plain glass or choose from four etched designs – Cattails, Floral, Sails, or Evergreen.

Cattails

Floral

Sails

Evergreen

STEP 4: PEDESTAL or LEGS

Choose a pedestal or legs to customize your look.

STANDARD PEDESTAL

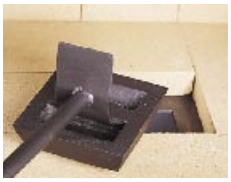

Ash Drawer Pedestal – Convenient ash drawer with cover and lifting bail make ash removal and disposal quick and easy.

LEG STYLES AND FINISHES

Two leg styles are available, Cascade and Olympic. Choose the leg style and finish to best complement the look of your décor.

Cascade | *Olympic cast – black* | *Gold-plated* | *Brushed gold-plated* | *Nickel-plated* | *Brushed nickel-plated*

STEP 5: BLOWER (optional)

Adding an optional variable-speed 700-CFM blower will help distribute the heat within your living space.

**Square-feet heating capacities and burn times are approximations only. Actual performance may vary depending upon home design and insulation, ceiling heights, climate, condition and type of wood used, appliance location, burn rate, accessories chosen, chimney installation and how the appliance is operated.*

ANATOMY OF A COUNTRY™ COLLECTION WOOD STOVE

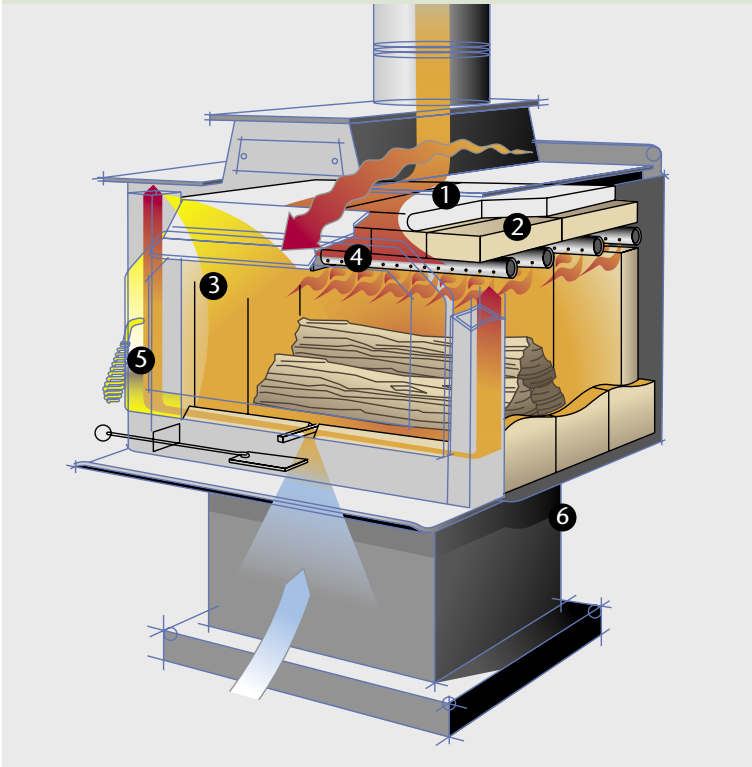

The Country™ Collection name is synonymous with quality products and clean-burning technology. Each Country Collection wood stove is EPA Phase II–certified and built with an exclusive non-catalytic combustion system that not only burns the wood, but also the smoke, providing clean emissions, a clear viewing window, and extra heat. A unique combination of premium-grade materials, quality craftsmanship, and sophisticated technology ensures that every wood stove we make will provide you and your family a lifetime of warmth.

STANDARD FEATURES

1. Ceramic-Fiber Blanket
   This technology, developed by the engineers at NASA, but introduced to the hearth industry with the Country Collection, has 10 times the insulation value of firebrick. It radiates heat back into the firebox, creating higher efficiencies and cleaner glass.
2. Refractory Baffle
   The unique design assists in igniting fuel-rich gases, increasing efficiency and reducing emissions.
3. Integral Airwash System
   Preheated primary combustion air enters the firebox and sweeps across the viewing glass, keeping the glass clean and clear for less maintenance and a wide-open view of the fire.
4. Secondary Combustion
   Stainless steel afterburner tubes mix oxygen with unburned gases and smoke to create a secondary burn, providing clean emissions and utilizing a previously wasted fuel source. By igniting those gases your stove will get more heat out of every log, and help keep your fuel costs low.
5. Heavy-Duty Door
   The beauty of this feature lies in its simplicity. The machined door handle has no nuts or washers to loosen or wear, and the glass is sandwiched between the two-piece cast-iron door, forming a 360° seal that will last for years.
6. Premium Materials
   The exterior of every stove is made from heavy-gauge steel and all critical parts inside the firebox are made of stainless steel for long service life.

LIMITED LIFETIME WARRANTY

We are proud to stand behind our stoves and we prove it by offering a Limited Lifetime Warranty.

SPECIFICATIONS

	STRIKER™ S160	PERFORMER™ SS210	PERFORMER™ ST210	LEGACY™ S260	CANYON™ ST310
Width	23-1/2”	25-1/4”	25-1/4”	28”	28-1/2”
Height: Cascade Legs (steel legs)	27-1/2”	27-1/2”	30-3/8”	33”	38-1/2”
Height: Olympic Legs (cast legs)	27-1/2”	27-1/2”	30-3/8”	33”	38-1/2”
Height: Pedestal	31”	31”	33-7/8”	36-1/2”	41-1/2”
Depth (door opening to rear shield)	17-3/4”	21-3/4”	21-3/4”	21-1/4”	23-1/2”
Approximate Weight: With Legs	316 lbs.	440 lbs.	442 lbs.	446 lbs.	525 lbs.
Approximate Weight: With Pedestal	310 lbs.	432 lbs.	436 lbs.	440 lbs.	519 lbs.
Stovepipe Diameter	6”	6”	6”	6” or 8”*	6” or 8”*

**Consult your dealer or professional installer for recommended chimney sizes for your application. S260 and ST310 require reducer when using 6” stovepipe.*

CLEARANCES

	STRIKER S160			PERFORMER SS/ST210			LEGACY S260				CANYON ST310	
Pipe Diameter	6"			6"			6"		8"		6"	8"
	Single-Wall Connector	Single-Wall with Shield Connector	Double-Wall Connector	Single-Wall Connector	Single-Wall with Shield Connector	Double-Wall Connector	Single-Wall Connector	Double-Wall Connector	Single-Wall Connector	Double-Wall Connector	Double-Wall Connector	Double-Wall Connector
A**= Flue Collar to Back Wall (US)	16"	10"	10"	16"	10"	10"	18"	12"	23"	16"	12"	12"
Flue Collar to Back Wall (CANADA)	19"	13"	13"	19"	13"	13"	18"	12"	23"	16"	12"	12"
C**= Flue Collar to Side Wall (US)	21"	18"	18"	24"	24"	18"	26"	23"	28"	25"	24"	24"
Flue Collar to Side Wall (CANADA)	24"	21"	21"	25"	25"	19"	26"	23"	28"	25"	24"	24"
G**= Flue Collar to Wall (US)	18"	13-1/2"	13-1/2"	18"	18"	15"	21"	21"	23"	22"	18"	18"
Flue Collar to Wall (CANADA)	21"	16-1/2"	16-1/2"	21"	21"	18"	21"	21"	23"	22"	18"	18"

HEARTH PROTECTION

E = Back of Stove (US)	0"	0"	0"	0"	0"	0"	0"	0"	0"	0"	0"	0"
Back of Stove (CANADA)	8"	8"	8"	8"	8"	8"	8"	8"	8"	8"	8"	8"
H = Pad Depth Minimum (US)	33-3/4"	33-3/4"	33-3/4"	37-3/4"	37-3/4"	37-3/4"	37-1/4"	37-1/4"	37-1/4"	37-1/4"	43-1/2"	43-1/2"
Pad Depth Minimum (CANADA) (E + Depth of Stove + K)	43-3/4"	43-3/4"	43-3/4"	47-3/4"	47-3/4"	47-3/4"	47-1/4"	47-1/4"	47-1/4"	47-1/4"	51-1/2"	51-1/2"
I = Pad Depth to Back Wall (US)	47-3/4"	41-3/4"	41-3/4"	51"	45"	45"	52-3/4"	46-3/4"	57-3/4"	50-3/4"	53"	53"
Pad Depth to Back Wall (CANADA)	52-3/4"	46-3/4"	46-3/4"	56"	50"	50"	54-3/4"	48-3/4"	59-3/4"	52-3/4"	53"	53"
J = Pad Width Minimum (US)	33-1/2"	33-1/2"	33-1/2"	34-3/4"	34-3/4"	34-3/4"	37-1/2"	37-1/2"	37-1/2"	37-1/2"	38"	38"
Pad Width Minimum (CANADA)	39-1/2"	39-1/2"	39-1/2"	41-1/4"	41-1/4"	41-1/4"	44"	44"	44"	44"	44-1/2"	44-1/2"
K = Front of Stove (US)	16"	16"	16"	16"	16"	16"	16"	16"	16"	16"	20"	20"
Front of Stove (CANADA)	18"	18"	18"	18"	18"	18"	18"	18"	18"	18"	20"	20"
L = Measured from Door Opening (US)	8"	8"	8"	8"	8"	8"	8"	8"	8"	8"	8"	8"
M = Measured from Sides of Unit (CANADA)	8"	8"	8"	8"	8"	8"	8"	8"	8"	8"	8"	8"
T = Pad Depth to Corner (US)	58-1/2"	52"	52"	61-3/4"	61-3/4"	57-1/2"	66"	66"	68-3/4"	67-1/4"	68"	68"
Pad Depth to Corner (CANADA)	64-3/4"	58-1/2"	58-1/2"	63-3/4"	63-3/4"	68"	68"	68"	70-3/4"	69-1/4"	68"	68"

ALCOVE

X = Minimum Width	48"	48"	44"	N/A	N/A	48"	N/A	54"	N/A	64"	56-1/2"	56-1/2"
Y = Maximum Depth	48"	48"	48"	N/A	N/A	48"	N/A	48"	N/A	48"	48"	48"
Z = Minimum Height	84"	84"	72"	N/A	N/A	72"	N/A	84"	N/A	84"	72"	72"

SIDE WALL/BACK WALL Fig. 1

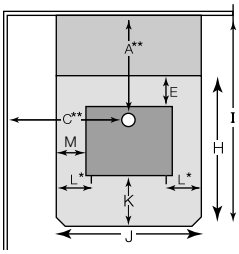

ALCOVE Fig. 2

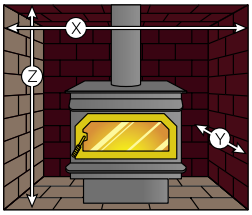

CORNER Fig. 3

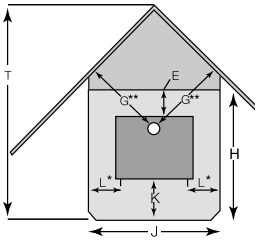

**Measured from door opening.*
***Clearances to flue are from the stove flue collar to combustibles.*

PRODUCTS YOU CAN COUNT ON

Lennox is committed to providing you with high-quality products. A qualified dealer can help you find the right product to give you years of comfort and enjoyment.

LENNOX

HEARTH PRODUCTS

Innovation never felt so good.™

© Lennox Industries Inc. 2008

Visit us at www.lennox.com, or contact us at 1-800-9-LENNOX.

785206M 02/08

IMPORTANT NOTES:

As with any heating appliance, fireplace or stove, this appliance is extremely hot during operation. Read and understand all operating instructions before using this appliance. For further information, consult your dealer.

Actual performance may vary depending upon home design and insulation, ceiling heights, climate, condition and type of wood used, appliance location, burn rate, accessories chosen, chimney installation and how the appliance is operated.

Diagrams, illustrations and photographs are not to scale—consult installation instructions. Product designs, materials, dimensions, specifications, colors and prices are subject to change or discontinuance without notice.

NFI

Tested & Listed By O-T-L Beaverton Oregon USA C US OMNI-Test Laboratories, Inc.