F0189

DO NOT SCALE. ALL DIMENSIONS ARE IN MILLIMETRES UNLESS OTHERWISE SPECIFIED. REMOVE ALL BURRS AND SHARP CORNERS

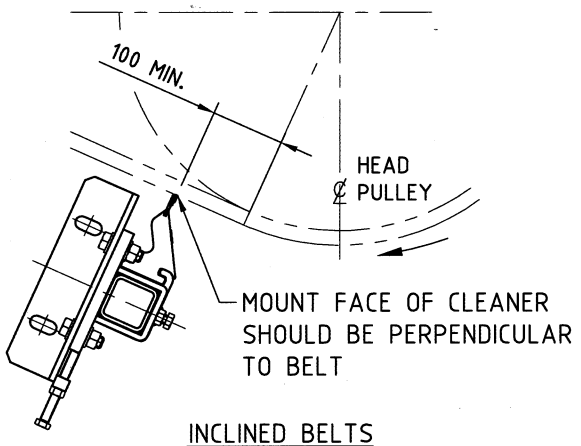


INCLINED BELTS

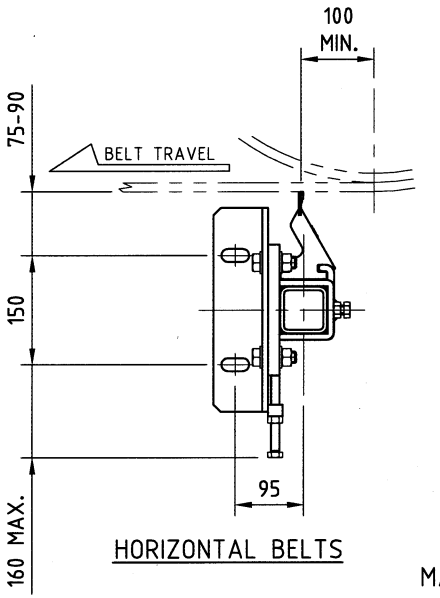


HORIZONTAL BELTS

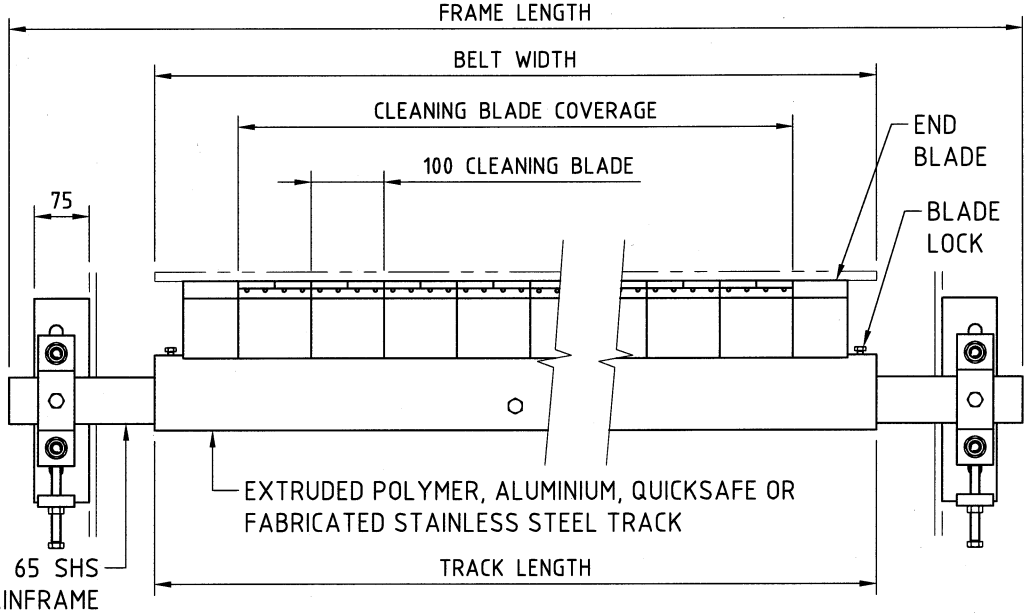


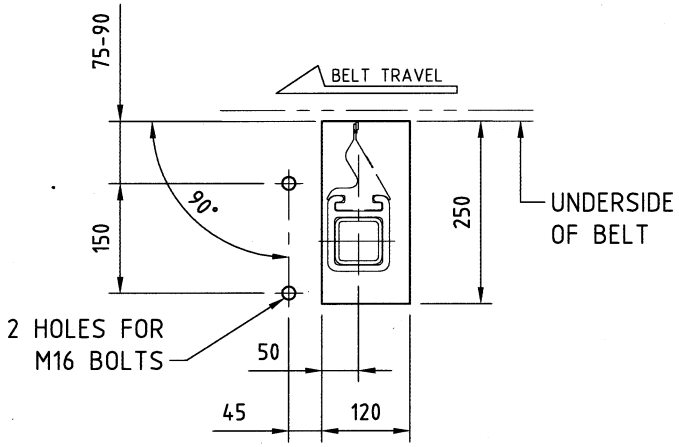


CHUTE CUTOUT DETAILS

GENERAL NOTES:

1. THE CLEANING PRESSURE FOR THE INLINE STANDARD SECONDARY CLEANER CAN BE ADJUSTED TO SUIT BY TIGHTENING OR LOOSENING THE ADJUSTMENT SCREW.
2. ENSURE CLEANER IS ADJUSTED EVENLY BY BRINGING THE CLEANER INTO EVEN CONTACT WITH THE BELT THEN ADJUSTING EQUALLY ON BOTH SIDES.
   NB. EXCESSIVE PRESSURE DOES NOT INCREASE CLEANING EFFICIENCY AND MAY RESULT IN REDUCED BELT LIFE.
   INLINE STANDARD CLEANERS ARE NOT SUITABLE FOR REVERSING BELTS.
3. FOR BELT WIDTHS OF 1800 OR WIDER A STIFFENER IS REQUIRED. AN INLINE PREMIUM SECONDARY CLEANER DATA SHEET MUST BE FILLED OUT AND RETURNED TO ESS ENGINEERING DEPARTMENT FOR CORRECT SIZING.
4. TUNGSTEN CARBIDE TIP BLADES ARE STANDARD.
5. END BLADES ARE NOT REQUIRED WITH URETHANE BLADES.
6. SPRING TENSIONER ASSEMBLIES ARE ALSO AVAILABLE - REF DRG No. F0237

| BELT WIDTH | 450 | 600 | 750 | 900 | 1050 | 1200 | 1350 | 1500 | 1600 | 1800 | 2000 | 2200 | 2400 |
|---|---|---|---|---|---|---|---|---|---|---|---|---|---|
| FRAME LENGTH | 1250 | 1400 | 1600 | 1800 | 1950 | 2100 | 2300 | 2450 | 2600 | 2800 | 3000 | 3300 | 3600 |
| TRACK LENGTH | 650 | 750 | 900 | 1100 | 1200 | 1300 | 1500 | 1700 | 1800 | 2000 | 2200 | 2400 | 2600 |
| STIFFENER LENGTH | NO STIFFENER REQUIRED | | | | | | | | | REFER TO NOTE 3. | | | |
| No. OF CLEANING BLADES | 4 | 5 | 6 | 8 | 9 | 10 | 12 | 13 | 14 | 16 | 18 | 20 | 22 |
| CLEANING BLADE COVERAGE | 400 | 500 | 600 | 800 | 900 | 1000 | 1200 | 1300 | 1400 | 1600 | 1800 | 2000 | 2200 |
| END BLADE WIDTH | 75 | 75 | 75 | 75 | 75 | 75 | 75 | 100 | 100 | 100 | 100 | 100 | 100 |

| | |
|---|---|
| | |
| | |
| | |
| | |
| | |
| F0237 | SPRING TENSIONER ASSEMBLY |
| DRAWING No. | REFERENCE DRAWINGS |

File: C:\Vault Working Folder\DRAWINGS\GENERAL\F_INSTALLATION DRAWINGS\F0100\F0189.dwg, 22/11/2010 9:17:32 AM, ggoodey

JOB No.

ESS CAD

CLIENT: ESS

LOCATION: QUEENSLAND

| REV | REVISIONS | REF DOCS | BY | CHKD BY | APP BY | DATE |
|---|---|---|---|---|---|---|
| I | CART. LENGTH REVISED SUIT END BLADES | EDCR338 | GG | SD | CW | 18/11/10 |
| H | TITLE WAS INLINE ECON | | GG | GC | TT | 22/6/05 |
| G | UPDATED | | GC | SD | TT | 2/12/04 |

ESS ENGINEERING SERVICES & SUPPLIES
CUSTOMER SERVICE No. 1800 074446

© R THIS DRAWING AND DESIGN IS CONFIDENTIAL AND REMAINS THE PROPERTY OF ESS ENGINEERING SERVICES AND SUPPLIES PTY.LTD. IT SHALL NOT BE COPIED,DUPLICATED OR SHOWN TO ANY OTHER PARTY WITHOUT SPECIFIC WRITTEN APPROVAL FROM ESS ENGINEERING SERVICES AND SUPPLIES PTY.LTD.

TITLE: INLINE STANDARD CLEANER INSTALLATION ARRANGEMENT

| DRAWN BY: TT | SCALE: NTS | DRAWING No. | REV. |
|---|---|---|---|
| CHKD:SD APPD: TT | DATE: 20/8/99 | F0189 | I |