F0227

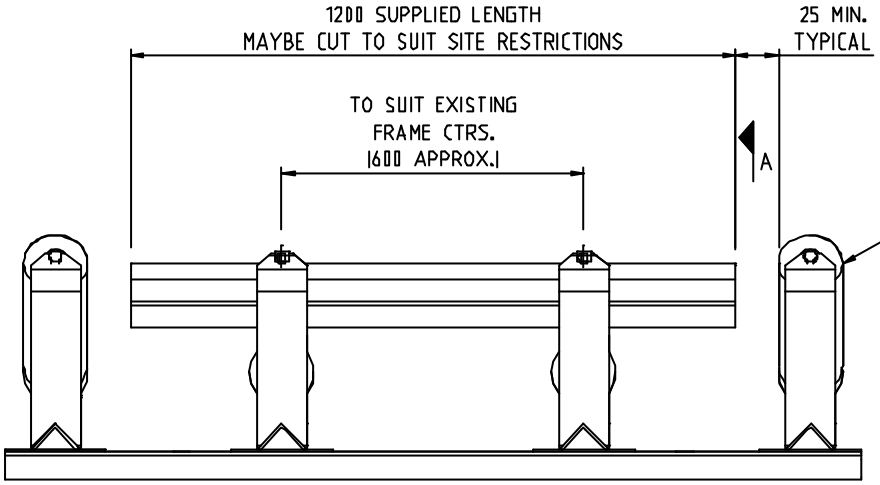

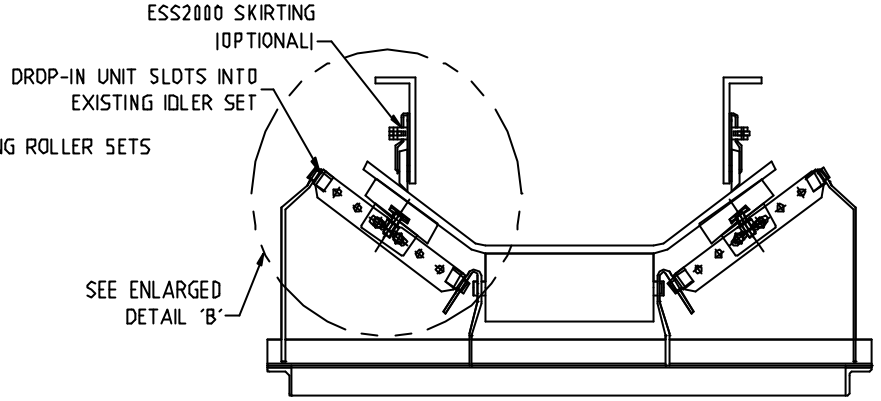

SECTION A A

ROLLER DATA (REFERENCE ONLY)		
BELT WIDTH	ROLLER FACE LENGTH	GUARDASEAL BAR WIDTH
500	191	100
600	226	
650	246	
750	280	
800	296	
900	333	150
1000	360	
1050	385	
1200	438	200

NOTE:
DETAILS OF THE ROLLER/IDLER SET USED IS REQUIRED BEFORE MANUFACTURE CAN COMMENCE.

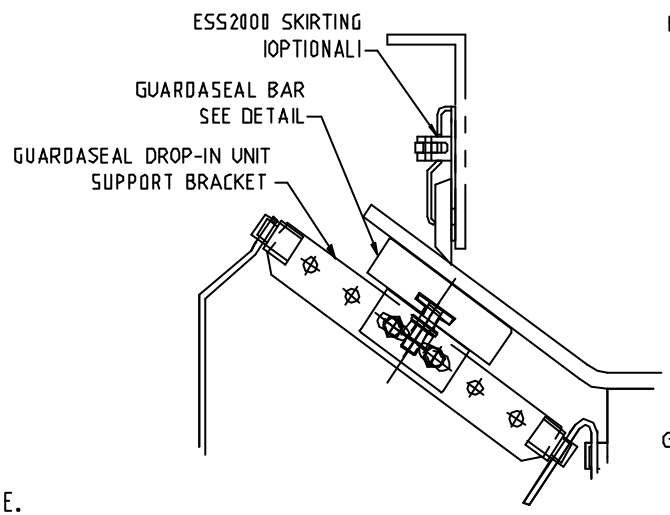

DETAIL B SHOWING ESS2000 SKIRTING OPTION

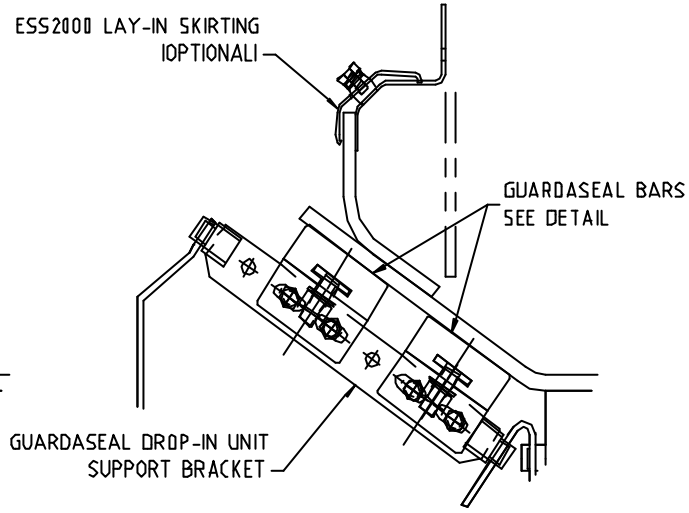

VIEW SHOWING ESS2000 'LAY-IN' SKIRTING OPTION
& OPTIONAL 2 BAR CONFIGURATION

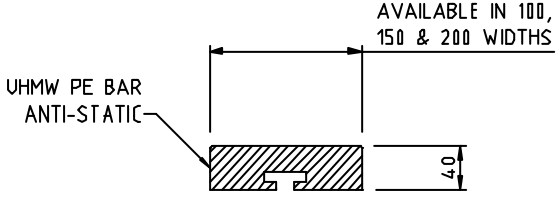

GUARDASEAL BAR DETAIL

JOB No.

ESS CAD

CLIENT: ESS

LOCATION: QUEENSLAND

REV	REVISIONS	BY	CHKD BY	APP BY	DATE
C	ROLLER DATA ADDED	B.P.	S.D.	T.T.	21/1/13
B	GUARDASEAL DROP-IN UNIT AMENDED	B.P.	S.D.	T.T.	15/1/13
A	Double Bar Option Added	R.D.	S.D.	T.T.	19/3/12

ESS ENGINEERING SERVICES & SUPPLIES
QLD Ph. 07-5598 1077 NSW Ph. 02 4272 4422 WA Ph. 08 9370 3155

© R THIS DRAWING AND DESIGN IS CONFIDENTIAL AND REMAINS THE PROPERTY OF ESS ENGINEERING SERVICES AND SUPPLIES PTY.LTD. IT SHALL NOT BE COPIED, DUPLICATED OR SHOWN TO ANY OTHER PARTY WITHOUT SPECIFIC WRITTEN APPROVAL FROM ESS ENGINEERING SERVICES AND SUPPLIES PTY.LTD.

TITLE: GUARDASEAL
DROP-IN UNIT
INSTALLATION / GENERAL ARRANGEMENT

DRAWN BY: S.D.		SCALE: 1:10	DRAWING No.	REV.
CHKD: R.D.	APPD: T.T.	DATE: 16/10/00	F0227	C