ALEXANDER SCHLEICHER SEGELFLUGZEUGBAU

POPPENHAUSEN / RHÖN

Flight - and Maintenance - Manual

for the Glider

AS - K 13

Edition

This Handbook has to be carried on bord of the aircraft

It belongs to the glieder

AS - K 13

.....

Serial No. 13682 A.B.

Manufacturer . Sportflugzeugbau JUBI G.m.b.H. Am Flugplatz 2 4811 Oerlinghausen Tel. 05202/72446

Devon und Sommerset Gliding Club

.....

Luftfahrtgerät - LBA - Lizenzierter Prüfer von Ausweis-Nr. 2219 Klasse 3

Krane

AS - K 13 Flight Manual

Amendments .

No.	Designation	Page	Date	Signature
I	TM Nr. 4	22 11a	5.12.69 24.11.69	Schleicher Krause

1. Operating Limitations

Air speeds:

Max. speed	125	mph
rough air	87	mph
aero tow	87	mph
auto and winch tow	62	mph

Weights:

Empty weight	650	lbs
Max. weight	1060	lbs
Max. weight of non lifting parts	710	lbs

Kategory: - 2 BVS

Limit load factor	
up	4,0
down	-2,0
Safety factor	2,0

Center of gravity position in flight:

Leveling means	Tangente to rib Nr. 3 horizontal.
Datum	wing leading edge rib 3
Max. forward	2,75 behind datum point
Max. rearward	9,7 " " "

Weak link in the tow cable:

Winch tow	max.	2350 lbs
	min.	1850 lbs
Aero tow	max.	1580 lbs
	min.	1060 lbs

2. Operating Directions:

Winch tow:

Max. tow speed is 62 mph.

Attention. In winch tow pulling the stick back means increase of speed. When lifting off ease the stick some what to overcome a light tentency to pitch up. Best attitude in climb is with stick normal. Winch tow on the belly hook only.

Aero tow

Max. towing speed is 87 mph.
For aero tow the nose hook is preferable.
Pull release till the stop..

Before every take off check canopy and airbrakes for complete locking.

Adjustment of the front rudder pedals.

Pull back the pedals with the heels and lock the adjusting link to the desired position.
Adjusting is possible during flight too.

In flight:

The presented values are calculated. They are related to EAS. There has to be considered the position error, see Fig. 1.
The indicated air speed reading may drop to zero when the glider is slipping or skidding due to movement of the total pressure peak from the nose to the side.

Fig. 1

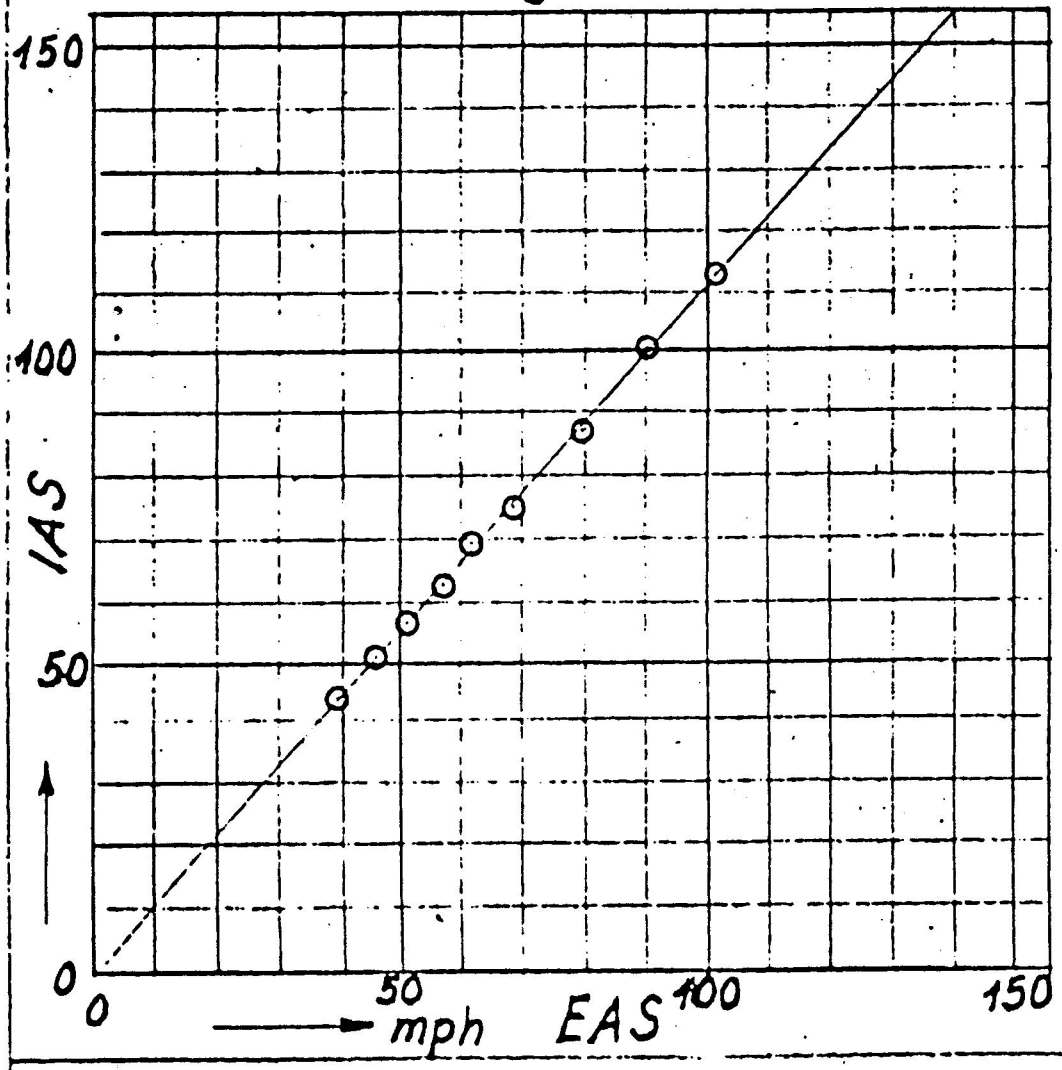

Stalling speed with an all up weight

of	840	lbs	is	35 mph
	1040	lbs	is	38 mph

Speed at min sink 40 mph

optim. glide 50 mph

Landing:

Approach speed 50 - 55 mph.
The glide angle can be adjusted in a wide range with the airbrakes. Touch down is best with partly extended airbrakes only. The wheel brake is actuated by the airbrake lever when fully pulled back.

Stalling and Spinning Behaviour:

With stick full back the aircraft can be controlled by the rudder. Applying a large amount of rudder will cause a spin. There has to be considered the influence of the center of gravity position to the spinning characteristics.
With the C.of Gr. pos. forward the aircraft will tend to go into a spiral dive and build speed very rapidly. In this case the airbrakes have to be opened first before pulling out.

With C. of Gr well in the middle spinning is normal and the aircraft will recover by giving free the controlls allone.

With C.of. Gr. near the most rear ward position spin recovery has to be managed by the following standard methode:

a) apply opposite rudder (i.e. against the direction of rotation of the spin);

b) pause ;

c) ease the control column forward until the rotation ceases

d) centralise rudder and allow aircraft to dive out.

At high speed there has to be watched the speed limits. When a speed of 87 mph is surpassed involuntary the airbrakes should be opened slowly.

Remember: At higher speeds the airbrake lever force is actuating in opening sense.

Rain drops, hoar frost and ice will disturb the wing surface, so quite adverse flying characteristics may result. Therefore caution is advised in such cases during approach, give enough speed margin.

Emergency Jettisoning of Canopy: To bail out the canopy has to be opened at the release knob at the left side and pushed forward out of the hinge. The hinges have to be watched for easy moveability.

Cloud flying

The glider has sufficient strength for cloud flying. Nevertheless some principal rules should be considered:

1) Overspeed in cloud flying should be prevented in any case. There should be the rule to open the airbrakes early at speeds of 65 to 75 mph.

2) Minimum equipment for cloud flying:
Air speed indicator with pitot tube protected against icing.
Sensitiv altimeter
Variometer
Compass
Turn and bank (power source insensitive against icing).
Chronometer
An artificiel horizon and accelerometer is recommended.

3) The ATC rules are to be observed.

4) Minimum Equipment:

Airspeed indicator ranging from 30 to 125 mph.
Altimeter
Safety belt and shoulder harness.
Back cushion if no parachute is carriad (min. thickness 4 inch).
Balance - and data plate
Flight Manual.

5) Adjusting Data:

The adjusting and washout - angles as well as the control surface deflections are shown in the outline drawing.
At repairs care should be taken to observe the tolerances.
By the particular kinemeticsof the control mechanism the aileron deflection will be influenced by the elevator. With normal stick position the ailerons have to be normal.

With pushed and pulled stick the ailerons are some what zoomed.

The controls have stops:

Rudder control: Fixed stop at the lower hinge.

Aileron control: Fixed stop at two hard wood pieces down the front seat.

Elevator control: Backward - fixed stop at the front edge of the seat, forward - fixed stop at the ground board.

Airbrakes:

Backward: Adjustable stop at the horizontal push atops against the main bulkhead frame. Forward: Fixed stop, cross shaft lever stops at a tube pi

6) Weights and Center of Gravity Positions:

After repairs, after installing of additional equipment, after new painting etc. there shoul be watched that the empty weight center of gravity is within the limits. If necessary balance weights are to be installed.

Empty weight		616	638	66o	682	7o5	1
center of gravity position	max.	21,45	21,o6	2o,68	2o,3	2o,o	
	min.	19,3	18,7	18,2	17,7	17,2	

behind datum point.

Leveling means: Tangate to rib 3 horizontal.

Datum: wing leading edge rib 3.

If the empty weight center of gravity is within the given limits it is verified that the in-flight center of gravity is correct provided the glider is properly loaded after the balance plate.

The center of gravity has an important effect to the gliders handling characteristics. Therefore one should pay attention to not exeed the given limits.

Too much backward position may become dangerous: Stalling and especially the spinning characteristi (flat spin) can be badly influenced. The elevator becomes more sensitive.

Too much forward position may deteriorate the performance and does not allow flying at maximum lift. (flare out when landing!).

The following ranges of flight position of. c.g. are tested:

a) max. forward position:
2,76 inches behind datum point.

b) max. aft position:
9,7 inches behind datum point.

6) Balancing instructions:

Cockpit load (Pilot + parachute).

single occup. front seat 143 - 220 lbs.

two occup. front seat 143 - 220 lbs.

Less load has to be completed with ballast on the seat (lead - or sand cushion).

Notice: If no parachute is carried a back cushio has to be used which has a compressed thickness of 4 inches.

Semiaerobatics:

Besides spins the following aerobatic maneuvres may be executed:

Loops

Stall turns

Lazy eights

Loop: Speed of entry 90 to 100 mph.

Stall turn: Speed of entry 100 to 110 mp
During climb at approx. 60 m
there has to be applied full
rudder and slightly opposite
aileron.

Lazy eight: Speed at the crossing point
90 to 100 mph.

7) Approved Versions:

Trim by weight

Fixing both standard trim weight (17 lbs) at the forward foot board will compensate for 22 lbs pilot weight.

1) Rigging:

1) Clean and grease bolts and holes.
2) First put in left wing from the side and put in rear bolt. Do not tilt fuselage.
3) Put in right wing as mentioned under 2.
4) Put in the tapered pins (first the lower) and screw on the nut. By slight shaking the wing this can be done easier.
5) Secure the tapered pin with a safety needl Secure the rear pins by the safety hooks.
6) Connect the aileron and airbrake linkages and secure by the safety needles.
7) Put on elevator, the front screw has to be fastened by the wrench.
There has to be watched that the bell cran is properly put into the pushrod counter - part. There is the danger of bending the push rod.
8) After the elevator has been put on the pushrod of the trim tab has to be connecte to the tab bell crank by a pin, washer and safety pin. It is recommended to fix the push rod for transport.

2) Preflight Check

After rigging resp. daily befor the first flight:
Check all rigging connections for proper se - curing. Look for foreign bodies. Check the controls, airbrakes and the release hook for free movement.

It is recommended to check frequently the whole glider thoroughly. There have been found quite a lot of unsecured bolts and damage at such occasions. Use a flash light to look into every spot.

3) Derigging

Point 1 - 8 (Rigging) in reverse sequence.
Grease all joints, danger of rust !

4) Road Transport

The design of a trailer is a special task and can not been talked here in all details. The firm of Schleicher will supply suitable drawings for trailers.
The wing is best supported at the spar root. The second support should have enough distance best about 8 feet from wing tip. A sufficient wide aera at the supports is important.

The same considerations concerns to the fusela ge. Fix points are the wheel, the fixing hole at the rear fuselage and the two welded in scr nuts on the side of the forward part of the fuselage.

Careful attention should be paid to prevent water coming into the interior of the wing and fuselage. The aileron and airbrake push rods in the fuselage should be fastened, best with a rubber strap.

5) Maintenance

Humity is the worst enemy of a wooden glider. Be careful tp prevent water remaining in corners. On suspicion that water came into wings and fuselage, bring same into a dry room and turn every day. The glider is endangered especially on open trailers. In any case it must be taken care for that by covering the front part no splash water will touch the wing root.

Also by condensing water considerable quantities of humidity can enter the interior of the glider.

Strong sun irradiation will affect the finish by time, therefore the glider should not be exposed to the sun more than necessary. The treatment of the finish with good waxes and polishing material will increase the durability and improve the surface, an important fact for perfor - mance. The advantages of the laminarprofil can only be achieved by a smooth surface.

Sealing of gaps with adhesive tape will also cause some gain of performance. However at the cockpit caution is necessary, when parachute bail out shall be possible.

Cleaning of the plexiglas canopy only with suitable cleaners. If not available use pure water. Soft cloth (gloves cloth). In no case rub with hard cloth dry on plexiglass.

Lubrication of bearings:

So far as possible, the ball bearings are covered and therefore need no special maintenance. Only the bearings at the wing root, where the rigging connections do not allow a suitable protection, must be cleaned with gasoline when dirty and greased again.

The control surface bearings are to be dismantled and greased at the annual overhauls.

Wheel: Tube pressure 35 psi.

The c.g. hook especially is exposed to dirt and needs often cleaning and oiling.

The tail skid shoe has to be soled from time to time by welding on a new steel plate. But it should be removed for this work to prevent annealing the spring.

The pressure openings for the instruments at the fuselage are to be sealed with adhesive tape on transport or extended parking. During longer non-flying periods it is advisable to put the in - struments completely out and store it in a dry room. When installing again watch correct connecting of the tubes.

The safety belts are to be checked currently for fractures, damp-stain and corrosion.

6) Overhauls

The tow hook has to be removed every 2000 launches or 2 years and sent back to the manufacturer for overhaul.
The rudder cables are to be replaced if there are any signs of worth mentioning wear.

7) Repairs

All major repairs should be made in the manufacturing firm. In cases of doubt please ask the Schleicher firm.

8) Appendix

3 - View drawing
Balancing sheet.

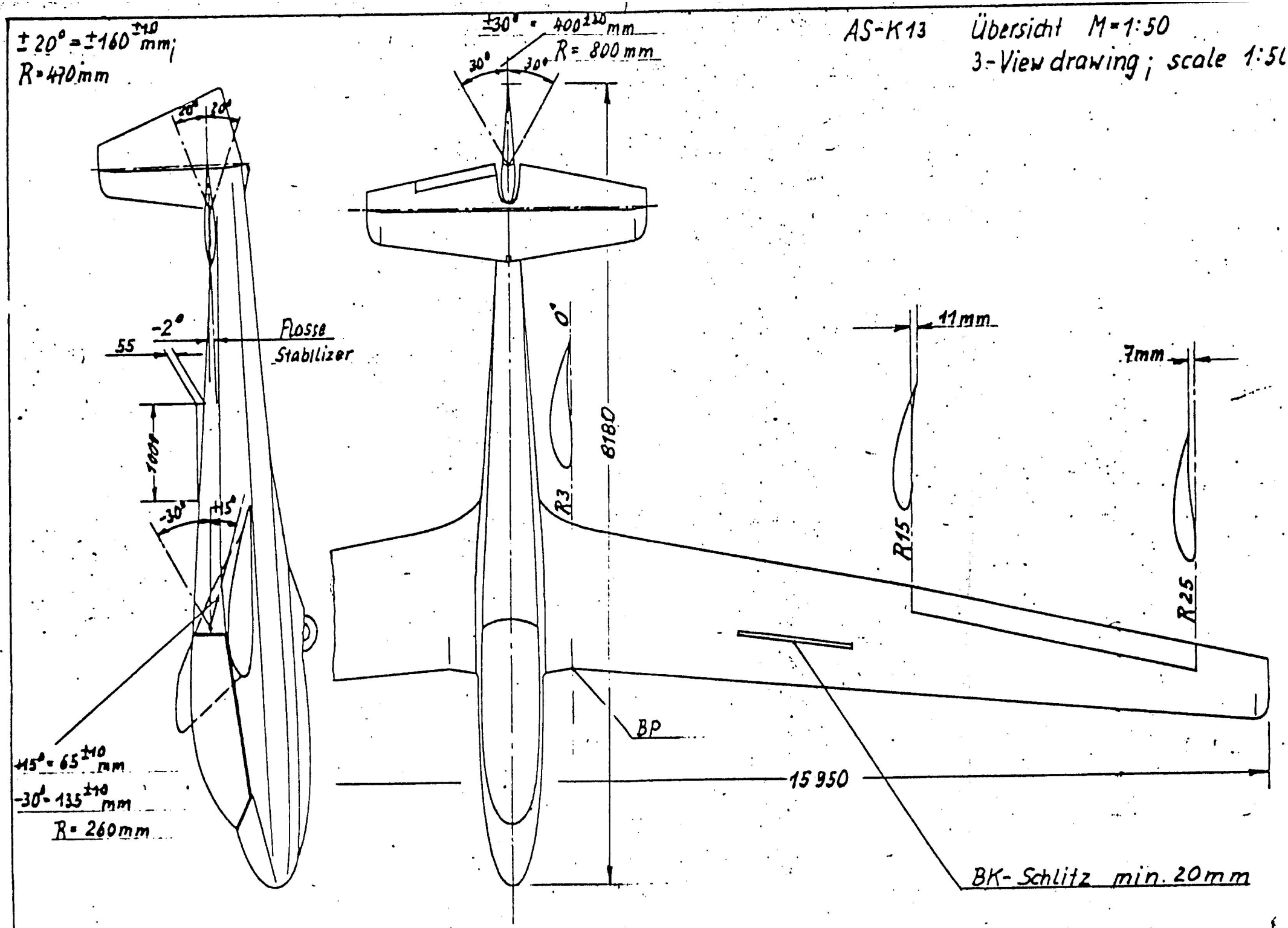
± 20° = ± 160 ±10 mm;
R = 470 mm
± 30° = 400 ±10 mm
R = 800 mm
AS-K13 Übersicht M = 1:50
3-View drawing; scale 1:50
20°
20°
30°
30°
-2°
Flosse
Stabilizer
55
100
-30°
+15°
0°
8180
R3
11mm
7mm
R15
R25
BP
15 950
+15° = 65 ±10 mm
-30° = 135 ±10 mm
R = 260 mm
BK-Schlitz min. 20mm

AS-K13 Wägeblatt; Balancing sheet

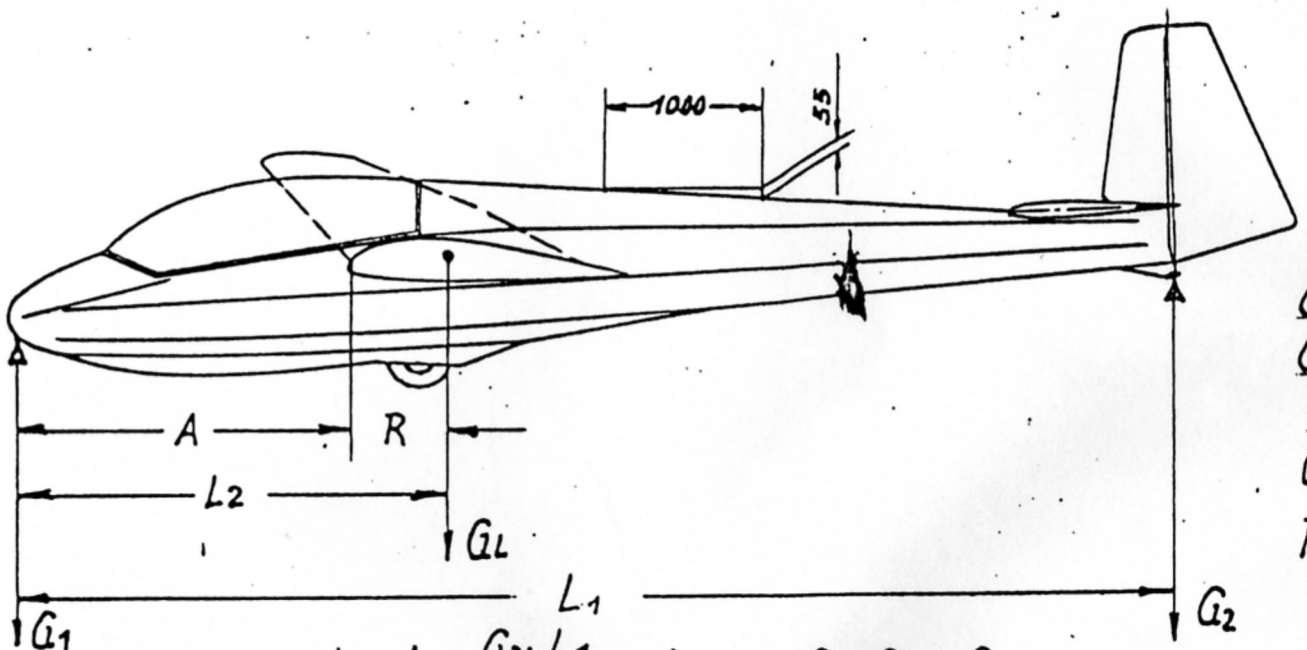

$$R = L_2 - A = \frac{G_2 \cdot L_1}{G_L} - A \qquad G_1 + G_2 = G_L$$

G_L = Leergewicht; empty weight
G_1 = Gewicht am vorderen Auflagep
weight at the front support.
G_2 = Sporngewicht; weight at tail s
R = Schwerpunktrücklage.
center of gravity position.

G_L = Leergewicht; empty weight	280	290	300	310	320	kp
R { Vorderste Schwerpunktlage; most forward position of C.of.Gr. empty min.	490	475	462	449	437	mm
R { Hinterste Schwerpunktlage; most rearward position of C.of.Gr. empty max.	545	535	525	516	508	mm