BUFFETWARE

CHAFING DISHES - PRINCE 312
CHAFING DISHES – PRINCESS 316
CHAFING DISHES – ELECTRIC 324
CHAFING DISHES – STANDARD 326
CHAFER – IMPERIAL MINI 328
SOUP KETTLE 329
VIDACASA 330
DISPENSERS 337
ACCESSORIES 342

ATHENA®
Lincolnshire, UK

NEW

DELUXE INDUCTION CHAFING DISH

This simple silhouette chafing dish is an evolved version of the patented hydraulic hinge which is applied to all models in the series, these provide smooth opening and silent closing of the lid.

Heavy gauge in shiny stainless steel defines it's quality and durability, it can be used directly on induction or use with the matching stand for electric or chafer fuel.

LID POSITION
- opens up to maximum 90°
- stays open at approx. 75°
- initiate to close by pressing down gently
- lid falls & closes automatically & silently

EU1935/2004 FOOD SAFE STANDARD CONFORMED

DETACHABLE LID
- for quick & easy cleaning

NOISE STOPPER
- ease noise of closing lid

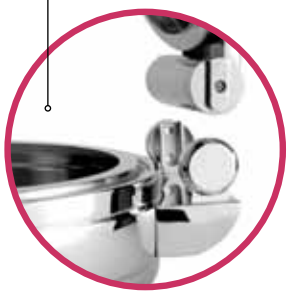

WATER RETURN SYSTEM
- condensation flows back to water pan instead of food

HYDRAULIC HINGE
- for smooth opening & closing of lid

CONVENIENT NOTCH
- changing food pan easily

ADJUSTABLE LEVEL SUPPORT
- for a perfectly level placement when required

CAPSULED BOTTOM
- multi layer bottom for fast & even heating
- compatible for induction, chafer fuel and electric heater

18/10 STAINLESS STEEL BODY

ATHENA
Lincolnshire, UK

NEW

PRINCE

18/10 Stainless steel body with capsuled bottom compatible for induction and chafer fuel. EU1935/2004 food safe standard conformed.

RECTANGULAR INDUCTION CHAFER 1/1 SIZE

Glass and Stainless Steel Lid

8311103

STAND FOR RECTANGULAR CHAFER 1/1 SIZE

Stainless Steel

8311110

RECTANGULAR INDUCTION CHAFER 2/3 SIZE

Glass and Stainless Steel Lid

8312303

STAND FOR RECTANGULAR CHAFER 2/3 SIZE

Stainless Steel

8312310

FOOD PAN OPTIONS

1/1 SIZE FOOD PAN

Stainless Steel

8335011 65mm 9lt

1/1 SIZE FOOD PAN

Porcelain

8335511 65mm 9lt

1/1 SIZE FOOD PAN 1 DIVIDER

Porcelain

8335572 65mm 4.3lt

2/3 SIZE FOOD PAN

Stainless Steel

8335023 65mm 5.9lt

2/3 SIZE FOOD PAN

Porcelain

8335523 65mm 5.9lt

2/3 SIZE FOOD PAN 1 DIVIDER

Porcelain

8335513 65mm 2.7lt

P 02 9316 8688 • **F** 02 9316 8533 • **W** www.trenton.com.au • **E** office@trenton.com.au

ATHENA
Lincolnshire, UK

NEW

PRINCE

ROUND INDUCTION CHAFER - SMALL

Glass and Stainless Steel Lid

8310003

ROUND INDUCTION CHAFER - LARGE

Glass and Stainless Steel Lid

8310023

SOUP STATION INDUCTION CHAFER

Glass and Stainless Steel Lid

8310503

STAND FOR ROUND CHAFER - SMALL

Stainless Steel

8310010

ROUND FOOD PAN

Stainless Steel

8310012 280mm Dia 4lt

ROUND FOOD PAN

Porcelain

8310013 280mm Dia 4lt

STAND FOR ROUND CHAFER - LARGE

Stainless Steel

8310030

ROUND FOOD PAN

Stainless Steel

8335001 360mm Dia 6.1lt

ROUND FOOD PAN 1 DIVIDER

Stainless Steel

8335002 360mm Dia 5.8lt

ROUND FOOD PAN

Porcelain

8335501 360mm Dia 6.1lt

ROUND FOOD PAN 1 DIVIDER

Porcelain

8335502 360mm Dia 5.8lt

STAND FOR SOUP STATION

Stainless Steel

8310510

ATHENA
Lincolnshire, UK

NEW

DELUXE INDUCTION CHAFING DISH

Reflects a perfect blend of elegant design and practical function. The dish can be used alone for an easy set up or with a matching stand for a more classic environment. Commonly used heating sources such as induction, electric & chafer fuel are all suitable.

The patented hinge mechanism assures smooth, gentle, silent opening and closing of the lid.

LID POSITION
- opens up to maximum 90°
- stays open at approx. 65°
- initiate to close by pressing down gently
- lid falls & closes automatically & silently

EU1935/2004 FOOD SAFE STANDARD CONFORMED

DETACHABLE LID
- for quick & easy cleaning

NOISE STOPPER
- eases noise of closing lid

WATER RETURN SYSTEM
- condensation flows back to water pan instead of food

HYDRAULIC HINGE
- for smooth opening & closing of lid

ADJUSTABLE LEVEL SUPPORT
- for a perfectly level placement when required

CAPSULED BOTTOM
- multi layer bottom for fast & even heating
- compatible for induction, chafer fuel and electric heater

INSERT LIFTING PIN
- changing food pan easily

18/10 STAINLESS STEEL BODY

ATHENA
Lincolnshire, UK

NEW

PRINCESS

18/10 Stainless steel body with capsuled bottom compatible for induction, fuel and electric heater. EU1935/2004 food safe standard conformed.

RECTANGULAR INDUCTION CHAFER 1/1 SIZE

Stainless Steel Lid

8331101

RECTANGULAR INDUCTION CHAFER 1/1 SIZE

Golden Rose Lid

8331102

RECTANGULAR INDUCTION CHAFER 1/1 SIZE

Glass and Stainless Steel Lid

8331103

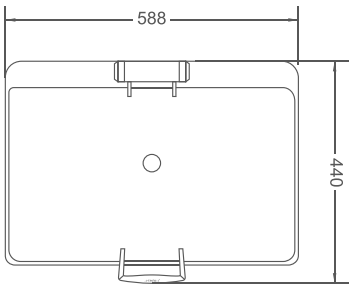

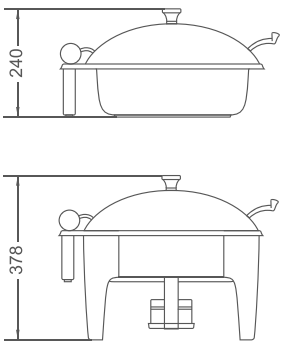

STAND FOR RECTANGULAR CHAFER 1/1 SIZE

Stainless Steel

8331110 588 x 440 x 240mm

FOOD PAN OPTIONS

1/1 SIZE FOOD PAN

Stainless Steel

8335011 65mm 9.0lt

1/2 SIZE FOOD PAN

Stainless Steel
2 Required

8335012 65mm 4.3lt

1/3 SIZE FOOD PAN

Stainless Steel
3 Required

8335013 65mm 2.7lt

1/1 SIZE FOOD PAN

Porcelain

8335511 65mm 9.0lt

1/1 SIZE FOOD PAN 1 DIVIDER

Porcelain

8335572 65mm 4.3lt

1/1 SIZE FOOD PAN 2 DIVIDER

Porcelain

8335573 65mm 2.7lt

P 02 9316 8688 • **F** 02 9316 8533 • **W** www.trenton.com.au • **E** office@trenton.com.au

ATHENA
Lincolnshire, UK

NEW

PRINCESS

RECTANGULAR INDUCTION CHAFER 2/3 SIZE

Stainless Steel Lid

8332301

RECTANGULAR INDUCTION CHAFER 2/3 SIZE

Golden Rose Lid

8332302

RECTANGULAR INDUCTION CHAFER 2/3 SIZE

Glass and Stainless Steel Lid

8332303

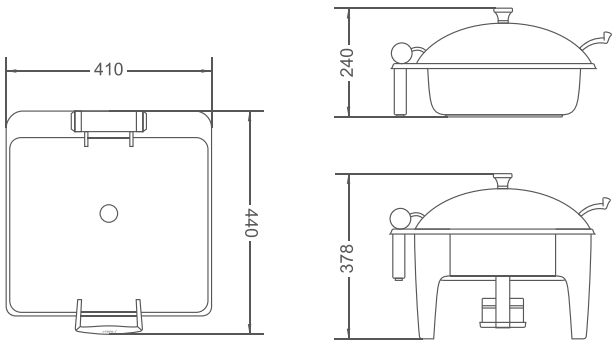

STAND FOR RECTANGULAR CHAFER 2/3 SIZE

Stainless Steel

8332310 440 x 410 x 240mm

FOOD PAN OPTIONS

2/3 SIZE FOOD PAN

Stainless Steel

8335023 65mm 5.9lt

1/3 SIZE FOOD PAN

Stainless Steel
2 Required

8335013 65mm 2.7lt

2/3 SIZE FOOD PAN

Porcelain

8335523 65mm 5.9lt

2/3 SIZE FOOD PAN 1 DIVIDER

Porcelain

8335533 65mm 2.7lt

1/3 SIZE FOOD PAN

Porcelain
2 Required

8335513 65mm 2.7lt

ATHENA
Lincolnshire, UK

NEW

PRINCESS

18/10 Stainless steel body with capsuled bottom compatible for induction, fuel and electric heater. EU1935/2004 food safe standard conformed.

RECTANGULAR INDUCTION CHAFER 1/2 SIZE

Stainless Steel Lid

8331201

RECTANGULAR INDUCTION CHAFER 1/2 SIZE

Golden Rose Lid

8331202

RECTANGULAR INDUCTION CHAFER 1/2 SIZE

Glass and Stainless Steel Lid

8331203

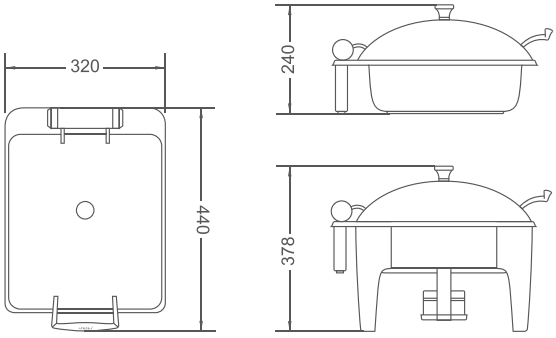

STAND FOR RECTANGULAR CHAFER 1/2 SIZE

Stainless Steel

8331210 440 x 320 x 240mm

FOOD PAN OPTIONS

1/2 SIZE FOOD PAN

Stainless Steel

8335012 65mm 4.3lt

1/2 SIZE FOOD PAN

Porcelain

8335512 65mm 4.3lt

P 02 9316 8688 • **F** 02 9316 8533 • **W** www.trenton.com.au • **E** office@trenton.com.au

ATHENA
Lincolnshire, UK

NEW

PRINCESS

ROUND INDUCTION CHAFER
Stainless Steel Lid

8330001

ROUND INDUCTION CHAFER
Golden Rose Lid

8330002

ROUND INDUCTION CHAFER
Glass and Stainless Steel Lid

8330003

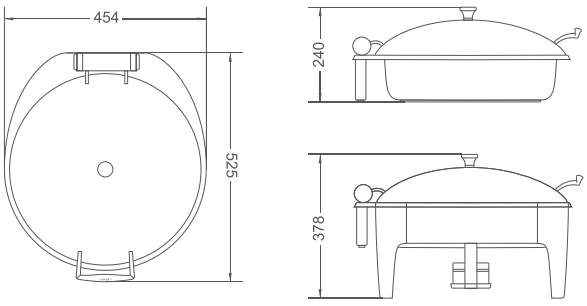

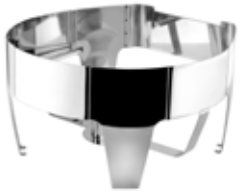

STAND FOR ROUND CHAFER
8330010 440 x 320 x 240mm

FOOD PAN OPTIONS

ROUND FOOD PAN
Stainless Steel

8335001 360mm Dia 6.1lt

DIVIDED ROUND FOOD PAN
Stainless Steel

8335002 360mm Dia 5.8lt

ROUND FOOD PAN
Porcelain

8335501 360mm Dia 6.1lt

DIVIDED ROUND FOOD PAN
Porcelain

8335502 360mm Dia 5.8lt

DIVIDED ROUND FOOD PAN
Porcelain, Ying Yang

8335503 360mm Dia 5.8lt

ATHENA
Lincolnshire, UK

NEW

PRINCESS

18/10 Stainless steel body with capsuled bottom compatible for induction, fuel and electric heater. EU1935/2004 food safe standard conformed.

SOUP STATION INDUCTION CHAFER

Stainless Steel Lid, Complete with Insert

8330501

SOUP STATION INDUCTION CHAFER

Golden Rose Lid, Complete with Insert

8330502

SOUP STATION INDUCTION CHAFER

Glass and Stainless Steel Lid, Complete with Insert

8330503

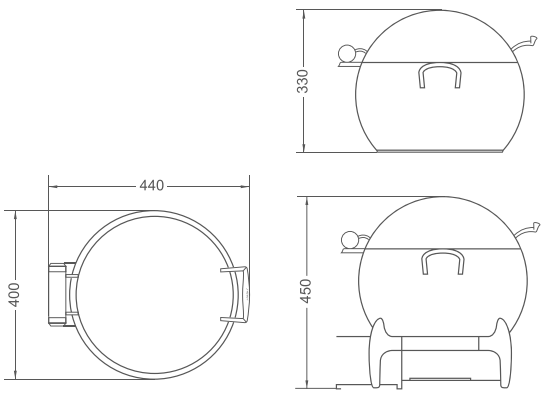

STAND FOR SOUP STATION

Stainless Steel

8330510 440 x 400 x 330mm

P 02 9316 8688 • **F** 02 9316 8533 • **W** www.trenton.com.au • **E** office@trenton.com.au

TRENTON

ROLL TOP ELECTRIC CHAFER

Item No.

84001

18/10 Stainless Steel
1/1 Size

Complete with:
1 x 1/1 65mm Food Pan
1 x Electric Water Pan
1 x Roll Top Cover and Stand
1 x Power cable
1 x Stand

SUNNEX®

INFO Cannot be used with chafing dish fuel. Water heated to 80 - 85°C approx.

RECTANGULAR ELECTRIC CHAFER

Item No.

84000

18/10 Stainless Steel
1/1 Size

Complete with:
1 x 1/1 65mm Food Pan
1 x Electric Water Pan
1 x Cover
1 x Cover Holder
1 x Stand
1 x Power cable

SUNNEX®

INFO Cannot be used with chafing dish fuel. Water heated to 85 - 88°C approx.

P 02 9316 8688 • **F** 02 9316 8533 • **W** www.trenton.com.au • **E** office@trenton.com.au

DELUXE RECTANGULAR ROLL TOP CHAFER

Item No.

83061

18/10 Stainless Steel
1/1 Size
Stackable Frame
Stays Open at 90° and 180°
Detachable Lid: For Quick & Easy Cleaning

Complete with:
1 x Roll Top Cover
1 x Stand
1 x 1/1 65mm Food Pan
1 x Boiler Pan
2 x Fuel holders

DELUXE ROUND ROLL TOP CHAFER

Item No.

83071

18/10 Stainless Steel
Round - 475mm Overall
Stackable Frame
Stays Open at 90° and 180°
Detachable Lid: For Quick & Easy Cleaning

Complete with:
1 x Roll Top Cover
1 x Stand
1 x 360mm diameter food pan
1 x Boiler Pan
1 x Fuel Holder

STANDARD RECTANGULAR ROLL TOP CHAFER

Item No.

84091

18/10 Stainless Steel
1/1 Size
90° Roll Top
Detachable Lid: For Quick & Easy Cleaning

Complete with:
1 x 1/1 65mm Food Pan
1 x Water Pan
1 x Roll Top Cover
1 x Stand
2 x Fuel holders

ROLL TOP COVER ONLY

18/8 Stainless Steel
Brass Handle

Item No.	Description
84090-C	Full Size

SPARE PARTS

18/8 Stainless Steel

A

B

C

D

Item No.	Description
84055-C	(A) Cover
84055-B	(B) Boiler Pan
84055-S	(C) Folding Stand
84055-F	(D) Fuel Holder

ROUND CHAFER

18/10 Stainless Steel
Insert Capacity: 3.50lt

Complete With:
1 x Round Food Pan
1 x Water Pan
1 x Cover
1 x Stand
1 x Fuel Holder

Item No.	Description
84111	All Stainless Steel
84121	With Brass Handles & Legs

OVAL CHAFER

18/10 Stainless Steel
Insert Capacity: 5.50lt

Complete With:
1 x Oval Food Pan
1 x Water Pan
1 x Cover
1 x Stand
2 x Fuel Holders

Item No.	Description
84131	All Stainless Steel
84141	With Brass Handles & Legs

P 02 9316 8688 • **F** 02 9316 8533 • **W** www.trenton.com.au • **E** office@trenton.com.au

DELUXE EUROPEAN CHAFER

18/10 Stainless Steel
Full Size
With Cover Clip

Item No.	Description
84061	With 1 x 1/1 65mm Pan

FOLDING LEG CHAFER

18/8 Stainless Steel
Stainless Steel Handles
Full Size

Item No.	Description
84051	With 1 x 1/1 65mm Pan

STACKABLE CHAFER

18/8 Stainless Steel
Full Size
With Cover Clip

Item No.	Description
84031	With 1 x 1/1 65mm Pan

CHAFER

18/8 Stainless Steel
Half Size
With Cover Clip

Item No.	Description
84010	With 1 x 1/2 65mm Pan

INFO All Chafers complete with:
1 x Insert Pan
1 x Water Pan
1 x Cover
1 x Stand
2 x Fuel Holders

NEW

IMPERIAL MINI

Designed for small buffet use. Imperial Mini chafer comes in two sizes and works perfectly in a venue with limited space. EU1935/2004 food safe standard conformed.

MINI CHAFER

18/10 Stainless Steel Body
To Suit 8371025 Food Pan

Item No.	Capacity
8371015	1.5lt

MINI CHAFER

18/10 Stainless Steel Body
To Suit 8371028 Food Pan

Item No.	Capacity
8371025	2.5lt

ROUND FOOD PAN

Porcelain

Item No.	Diameter	Height	Capacity
8371018	200mm	100mm	1.5lt

ROUND FOOD PAN

Porcelain

Item No.	Diameter	Height	Capacity
8371028	200mm	155mm	2.5lt

caterchef™ SOUP KETTLE

Suited to keep sauces, soups etc, at the right serving temperature. Contains a stainless steel inner pot, hinged lid with hole for a ladle, thermostat and a pilot light.

SOUP KETTLE

	Item No.	Capacity
Black Body	**83100**	10lt

INFO
Voltage: 240V
Watts: 2400W
Diameter: 330mm
Height: 360mm
Warranty: 12 months

SOUP KETTLE

	Item No.	Description
Stainless Steel Body	**83120**	10lt

INFO
Voltage: 240V
Watts: 2400W
Diameter: 330mm
Height: 360mm
Warranty: 12 months

VIDACASA™
FRESH FOOD ALWAYS

VIDACASA™ Buffetware keeps the food plate surface at 4°C (32°F) for up to 6 hours, without the use of external power. This innovative cooling feature assures delicate perishables like fresh seafood, Japanese raw food, cold cuts, salads and even desserts be served freshly in all hotels, restaurants and catering outlets.

VIDACASA™ BUFFETWARE IS COMPOSED OF THREE PARTS:

1 top porcelain food plate

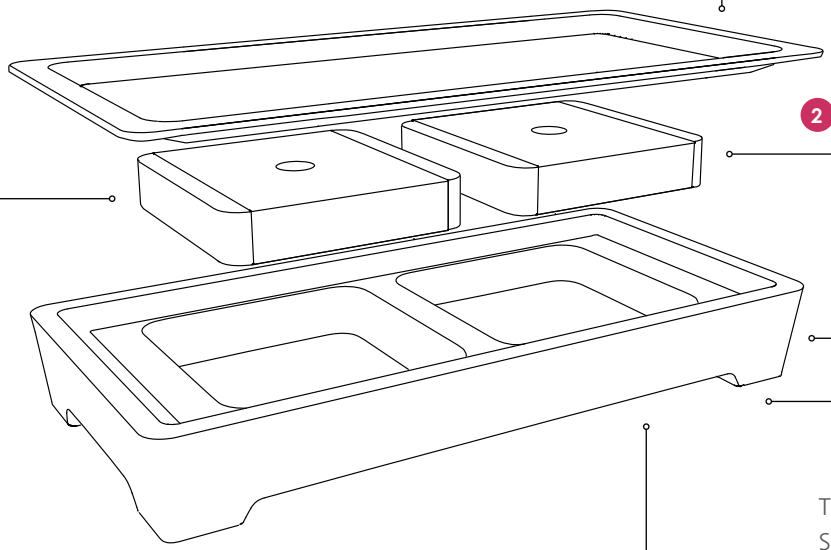

2 the innovative reusable iThermo® Cell

3 the polyurethane thermal base

The use of the iThermo® Cell is easy. Simply store it in any freezer overnight or until it becomes a solid, place into the thermal base, and watch the magic cooling power!

iThermo® technology absorbs cooling power during state transformation and releases cold thermal power for long hours. With the use of the iThermo® Cell, VIDACASA™ Buffetware can keep its surface at a low temperature for up to 6 hours, without using wet ice, dry ice or electricity supply.

The entire VIDACASA™ Buffetware collection is eco-friendly and food safe, while the iThermo® Cell can be reused, saving huge operation costs and providing green environment benefits to the earth.

VIDACASA™
FRESH FOOD ALWAYS

ROUND COLD FOOD DISPLAY SYSTEM

Item No.	Diameter	Depth
8201020	360mm	20mm

SPARE ROUND PLATTER

Porcelain

Item No.	Diameter	Depth
8201120	360mm	20mm

ROUND COLD FOOD DISPLAY SYSTEM

Round

Item No.	Diameter	Depth
8201050	360mm	50mm

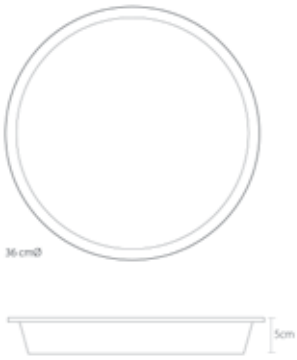

SPARE ROUND PLATTER

Porcelain

Item No.	Diameter	Depth
8201150	360mm	50mm

P 02 9316 8688 • **F** 02 9316 8533 • **W** www.trenton.com.au • **E** office@trenton.com.au

VIDACASA™
FRESH FOOD ALWAYS

ROUND COLD FOOD DISPLAY SYSTEM

Item No.	Diameter	Depth
8201080	360mm	80mm

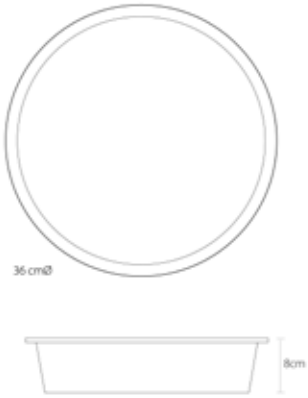

SPARE ROUND PLATTER

Porcelain

Item No.	Diameter	Depth
8201180	360mm	80mm

VIDACASA™
FRESH FOOD ALWAYS

SQUARE COLD FOOD DISPLAY SYSTEM

Item No.	Dimensions	Depth
8202020	300 x 300mm	20mm

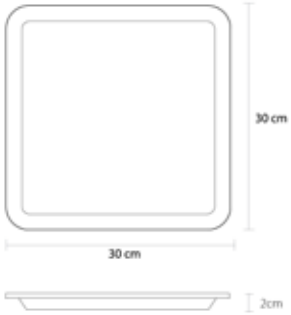

SPARE SQUARE PLATTER

Porcelain

Item No.	Dimensions	Depth
8202120	300 x 300mm	20mm

SQUARE COLD FOOD DISPLAY SYSTEM

Item No.	Dimensions	Depth
8202050	300 x 300mm	50mm

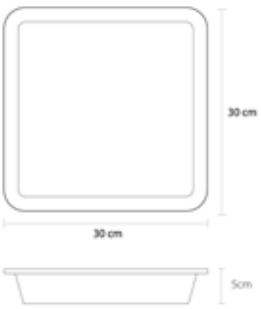

SPARE SQUARE PLATTER

Porcelain

Item No.	Dimensions	Depth
8202150	300 x 300mm	50mm

P 02 9316 8688 • **F** 02 9316 8533 • **W** www.trenton.com.au • **E** office@trenton.com.au

VIDACASA™
FRESH FOOD ALWAYS

RECTANGLE COLD FOOD DISPLAY SYSTEM

Item No.	Dimensions	Depth
8203020	600 x 300mm	20mm

SPARE RECTANGLE PLATTER

Porcelain

Item No.	Dimensions	Depth
8203120	600 x 300mm	20mm

RECTANGLE COLD FOOD DISPLAY SYSTEM

Item No.	Dimensions	Depth
8203050	600 x 300mm	50mm

SPARE RECTANGLE PLATTER

Porcelain

Item No.	Dimensions	Depth
8203150	600 x 300mm	50mm

VIDACASA™
FRESH FOOD ALWAYS

OVAL COLD FOOD DISPLAY SYSTEM

Item No.	Dimensions	Depth
8204020	600 x 380mm	20mm

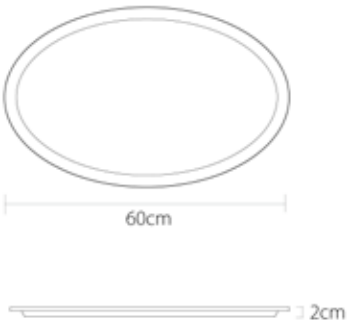

SPARE OVAL PLATTER

Porcelain

Item No.	Dimensions	Depth
8204120	600 x 380mm	20mm

OVAL COLD FOOD DISPLAY SYSTEM

Item No.	Dimensions	Depth
8204050	600 x 380mm	50mm

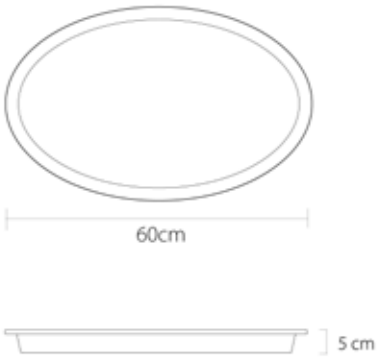

SPARE OVAL PLATTER

Porcelain

Item No.	Dimensions	Depth
8204150	600 x 380mm	50mm

P 02 9316 8688 • **F** 02 9316 8533 • **W** www.trenton.com.au • **E** office@trenton.com.au

ATHENA®
Lincolnshire, UK

IMPERIAL

Modern design with cast metal legs, this Imperial range of dispensers provides solutions for serving juice, milk and hot coffee.

JUICE DISPENSER - IMPERIAL

Cast alloy legs

Item No.	Capacity
8381001	8lt

MILK DISPENSER - IMPERIAL

Cast alloy legs

Item No.	Capacity
8381002	6lt

COFFEE URN - IMPERIAL

Cast alloy legs

Item No.	Capacity
8381003	11lt

ATHENA
Lincolnshire, UK

METRO

Slim design, these dispensers suit most buffet styles.

JUICE DISPENSER - METRO

Steel base

Item No.	Capacity
8382001	8lt

MILK DISPENSER - METRO

Steel base

Item No.	Capacity
8382002	6lt

NEW

CEREAL DISPENSER - METRO

Steel base

Item No.	Capacity
8382004	8lt

ATHENA
Lincolnshire, UK

KOOL

Rustic wood bases enhance these versatile dispensers.

JUICE DISPENSER - KOOL

Natural acacia base

Item No.	Capacity
8383001	5lt

MILK DISPENSER - KOOL

Natural acacia base

Item No.	Capacity
8383002	4lt

SINGLE JUICE DISPENSER

18/10 Stainless Steel
Acrylic Body and Plastic Tap

Item No.	Dimensions	Capacity
83001	260 x 360 x 550mm	7lt

DOUBLE JUICE DISPENSER

18/10 Stainless Steel
Acrylic Body and Plastic Tap

Item No.	Dimensions	Capacity
83002	540 x 360 x 550mm	7lt x 2

SPARE PARTS

Item No.	Description
83011	Cover (A)
83012	Acrylic Body (B)
83013	Tap (C)
83014	Knob (D)
83015	Ice Chamber (E)
83016	Drip Tray & Strainer (F)

MILK DISPENSER

18/10 Stainless Steel

Item No.	Dimensions	Capacity
83018	260 x 360 x 550mm	7lt

P 02 9316 8688 • **F** 02 9316 8533 • **W** www.trenton.com.au • **E** office@trenton.com.au

NEW

SINGLE JUICE DISPENSER

18/10 Stainless Steel
Acrylic Body and Plastic Tap

Item No.	Dimensions	Capacity
83021	220 x 330 x 492mm	5lt

NEW

DOUBLE JUICE DISPENSER

18/10 Stainless Steel
Acrylic Body and Plastic Tap

Item No.	Dimensions	Capacity
83022	385 x 430 x 520mm	5lt x 2

SINGLE CEREAL DISPENSER

18/10 Stainless Steel
Acrylic Body

Item No.	Dimensions	Capacity
83081	240 x 330 x 640mm	7lt

TRIPLE CEREAL DISPENSER

18/10 Stainless Steel, Revolving
Acrylic Body

Item No.	Dimensions	Capacity
83093	284 x 305 x 605mm	4lt

BUFFET CARD HOLDER

18/8 Stainless Steel

Item No.	Width	Height
70202	60mm	40mm

BUFFET CARD HOLDER

18/8 Stainless Steel

Item No.	Width	Depth
57500	60mm	55mm

CHAFING DISH FUEL

100% Australian Made
Non combustible and non flammable, safe food heating solution. Contains 100% diethelyene glycol, very clean burning with no unpleasant odours. Can remains cool to touch, and will not spill if tipped. The wick is braided creating a steady flame and constant heat. No restrictions on freight or storage.

2 Hour fuel is perfect for smaller buffets or boardroom functions.
4 Hour is the most popular burn time for resorts and hotels, on their buffets both inside and out.
6 Hour is a popular burn time for resorts, hotels and casinos with longer running food and beverage departments.

EASY HEATER CHAFING DISH FUEL

Item No.	Description
84002	2 Hour

EASY HEATER CHAFING DISH FUEL

Item No.	Description
84004	4 Hour

EASY HEATER CHAFING DISH FUEL

Item No.	Description
84006	6 Hour

P 02 9316 8688 • **F** 02 9316 8533 • **W** www.trenton.com.au • **E** office@trenton.com.au

BUFFET SIGNS

18/8 Stainless Steel
50mm W x 40mm H

Item No. **57700-1**

Item No. **57700-2**

Item No. **57700-3**

Item No. **57700-4**

Item No. **57700-5**

Item No. **57700-6**

Item No. **57700-7**

Item No. **57700-8**

Item No. **57700-9**

Item No. **57700-10**

Item No. **57700-11**

Item No. **57700-12**

Item No. **57700-13**

Item No. **57700-14**

Item No. **57700-15**

Item No. **57700-16**

Item No. **57700-17**

Item No. **57700-18**

Item No. **57700-19**

Item No. **57700-20**

Item No. **57700-21**

Item No. **57700-22**

Item No. **57700-23**

Item No. **57700-24**

Item No. **57700-25**

Item No. **57700-26**

Item No. **57700-27**

Item No. **57700-28**

Item No. **57700-29**

Item No. **57700-30**

Item No. **57700-31**

Item No. **57700-32**

Item No. **57700-33**

Item No. **57700-34**

Item No. **57700-35**

Item No. **57700-36**

Item No. **57700-37**

Item No. **57700-38**

Item No. **57700-39**

Item No. **57700-40**

Item No. **57700-41**

Item No. **57700-42**

Item No. **57700-43**