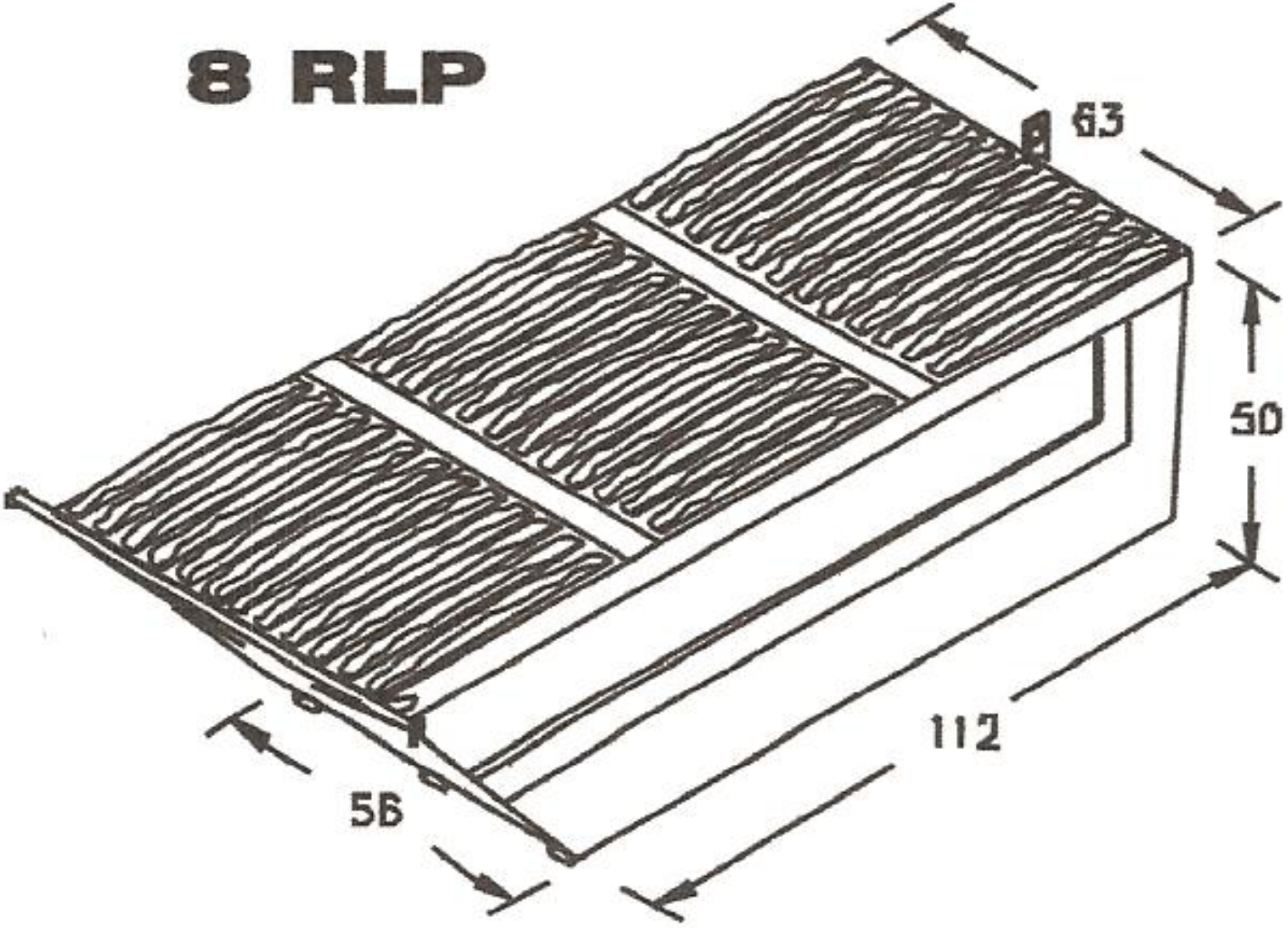8 RLP