LTM-2 SLURRY-PULP LEVEL MONITORING PROBE

Flotation Cells, Sumps and wherever slurry level measurement is needed

MANUAL:

OPERATING PRINCIPLES, PROBE LENGTH DETERMINATION, INSTALLATION AND CALIBRATION

+27 (0) 12 998 6326

+27 (0) 73 420 3757

+27 (0) 86 508 7575

info@ltm-2.com | www.ltm-2.com

INSTEK CONTROL

INSTRUMENTATION & CONTROL

LTM-2 SLURRY-PULP LEVEL MONITORING PROBE

INTRODUCTION

LTM-2 probes are typically installed in flotation banks, individual flotation cells or in pump sumps to provide consistent accurate pulp level measurement. This document provides best practices for proper probe installation for both flotation and sump monitoring applications. LTM-2 probe sizing guidelines are also provided in the individual flotation and sump sections below.

While the information below attempts to cover a range of specification and installation circumstances, reviewing your application specifics with **INSTEK CONTROL** before ordering and installing is highly recommended.

GENERAL OVERVIEW

LTM-2 probes operating on a conductance principle with advanced level sensing technology are robust and have no moving parts. Level measurement is a potentiometric reading which with LTM-2's advanced signal processing, provides accurate and consistent water interface level readings (**Figure 1**). Maintenance and attention is usually very minimal with occasional water or acid (for scale removal if there is a buildup) spray washing is the only requirement to keep the probes performing well.

The conductance operating principle with the LTM-2's advanced signal processing means more precise measurement of the top of a slurry surface, even with froth on the slurry. A continuous water phase will effectively carry sufficient electrical current for a level signal reading. Because froths and foams do not have sufficient continuous water to carry the small current required, froths and foams are not measured. LTM-2 probes measure only the interface between the slurry and froth.

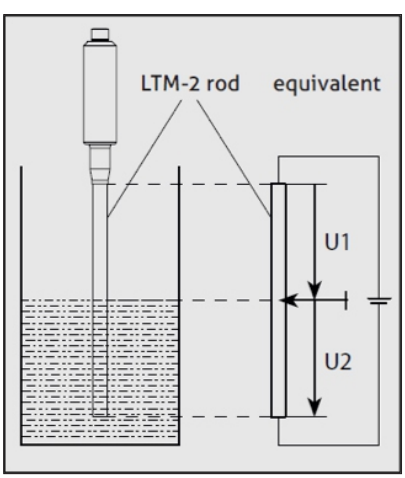

Figure 1: Potentiometric measuring principle

A range of level monitoring devices and technologies are used for slurry level monitoring, often working well with adequate attention. Unlike ultrasonics and ultrasonic devices, the LTM-2's continuous current reading is much more instantaneous. Readings from ultrasonic devices are subject to considerable variation, whether as a float ball/target device (flotation) which is subject to waves, varying % solids, solids loading on the balls themselves or direct readings (flotation and sumps) where wave action and presence of froth and foam causes misreading since ultrasonics monitor an uneven surface area, not a point as LTM-2 probes. So significant signal integration is required that limits response time.

Pressure differential devices provide a more instantaneous reading and can be accurate, however, accuracy issues are encountered due to % solids fluctuations, even as small as 2% solids. Further, cell airflow changes which float operator used to control their circuits change the slurry's apparent specific gravity that very significantly impacts pressure differential readings. LTM-2 probes are not affected by % solids nor the amount of flotation cell air input rates.

LTM-2 probes have a high tolerance for solids caking and scale buildup as accurate readings are generally obtained down to a very low 50 µS conductivity level. Generally the scouring action from mixing slurry will be sufficient to maintain probe conductivity sensitivity, Washing down the probe during shut-downs with hose spray will manage the effect of any solids buildup that may occur. In scaling conditions periodic descaling with acid during shutdowns is recommended to ensure consistent level measurement accuracy.

Probe lengths come in standard 100 mm increments from 500 to 3000 mm, consequently the calculated L probe length will be rounded up to the next 100 mm increment. But probe lengths shorter than 500 mm and in increments different from 100 mm increments are possible.

Standard probe material of construction is 316 stainless steel. In cases of high chloride levels or where the chemical conditions make 316 stainless incompatible, probes constructed with Hastelloy C-4 can be supplied but this is at significantly higher cost. LTM-2 probe is manufactured with surgical grade 316 stainless steel and is quite wear resistant. The probes can last for several years in slurries.

In some cases, such as in primary and secondary mill sumps, the erosive forces from coarse particles can shorten probe life and a modified installation can extend the performance and probe service life. The probes can be installed inside large poly pipes with appropriate holes drilled into the sides to ensure slurry level equilibration to reduce particle impact, as well as making sure the probe does not extend into the most abrading slurry flow regions in a cell or cells.

The exact same LTM-2 probe is used for flotation cells-banks, pump sumps, filter tanks and the like. And the same bracket is used for conventional cells and sumps. A modified LTM-2 probe bracket design is used in column cells using froth wash water to minimize electrical conductivity short circuiting.

The probes can be used in many application points with some installation modifications to maximize performance and effectiveness.

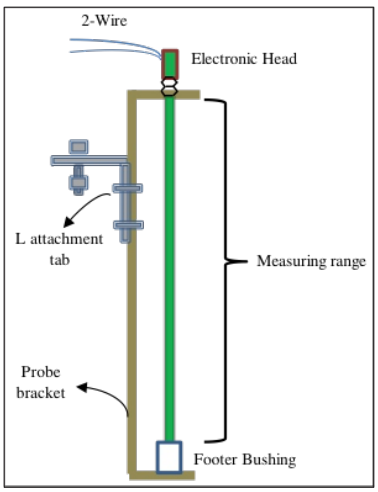

Figure 2: Main LTM-2 probe and bracket components

FLOTATION BANKS, CELLS AND COLUMNS

This section describes the flotation probe sizing for flotation cells, banks and columns and key installation and operation points that will help ensure your LTM-2 probe will provide good, reliable performance. **Figures 2, 3** and **5** are schematics of the probe showing the main probe component details and a flotation cell cutaway showing proper probe flotation cell installation, respectively.

Figure 3: LTM-2 probe on stand

- A single LTM-2 probe is installed wherever there is a flotation bank, cell or column level controller such as a dart or pinch valve that actively manages flotation pulp level. The LTM-2 probe sends a pulp level signal that is utilized by the flotation cell level control system to maintain pulp level depth at setpoint.
- Slurry level can be measured over the entire probe length, although calibrating the measurement length to the required slurry level range generally improves measurement accuracy.
- When using the LTM-2 bracket, 40 mm of probe end is inserted into a polypropylene bushing to steady the probe well as ensuring electronical isolation from the metal bracket. There is no level measurement in the bushing so actual maximum possible measuring length is reduced by 40 mm which means an additional 40 mm probe length is required.
- The probe extends above the cell or sump for attachment to the cell itself or to some part of the cell structure so some length above the cell's slurry level actively measuring.
- The LTM-2 probe is attached above the slurry via the probe bracket to the flotation cell through an adjustable attachment point above the vessel. The INSTEK CONTROL supplied bracket comes with an L attachment tab that is bolted onto the round bracket with U-bolts. The mounting tab can be slid up/down the bracket pole to the needed position and U-bolts tightened to hold the attachment point firmly in place.
- Typically, the bracket L tab is bolted to the side of the vessel or to a supporting structure above the cell (**Figure 4**). Often the probe is positioned at or near the location of the existing level monitoring device. Installation of a strut or brace to which the probe bracket can be firmly attached (as shown in the picture to the right) to minimize probe movement in the pulp. IMPORTANT: the bracket should be attached so there is current continuity to the vessel.
- Probe length sizing process is simple and straightforward:
  - Establish the expected operating froth depth range with a good level of confidence. Multiply the expected measurement range by 1.15 to ensure the probe will be sufficiently long to effectively measure any pulp levels that may occur. For conventional impeller cells, the probe must not extend into the flotation cell impeller and turbulent cell mixing zone or excessive wear is possible. This is the MR length.

Figure 4: LTM-2 bracket connection to application point

- Determine location and height above the froth lip of the probe attachment brace. There is a structural tab on the bracket that can be positioned over the entire bracket length and secured at the position desired using the attachment tab U-bolts. Determine where the bracket will be attached and measure from the head height to the froth lip height. Note the sliding tab allows some vertical positioning flexibility to accommodate specific site installation and access conditions. This is the AS length.

- Total probe length required is the addition of the two measurements above plus the 40 mm footer fitting:

$$L = MR + 40 \text{ mm}$$

where L = probe length required, mm
MR = measurement range, mm
AS = above slurry (from froth lip) probe length, mm

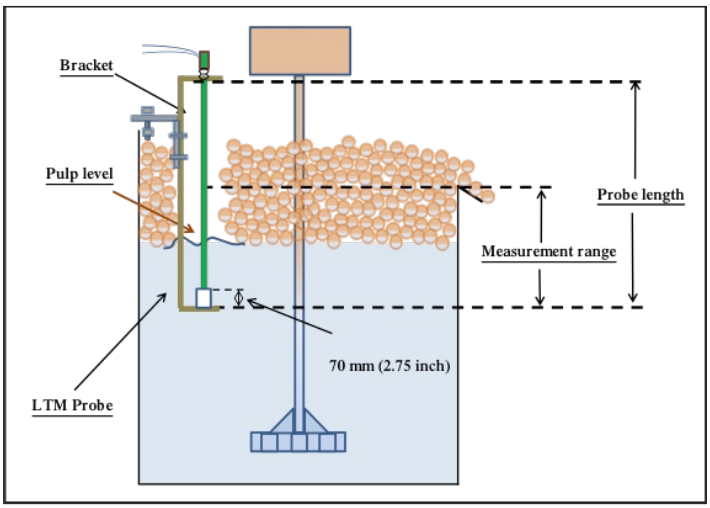

Figure 5: LTM-2 flotation cell installation schematic

» Calibration typically only requires setting the 4 and 20 ma measurement range which can be done on the bench before using the MPI-200 adaptor that accesses the LTM-2 program logic. The 4 ma level is usually set at 40 mm from the probe end, which is the top of the footer fitting. For enhanced measurement accuracy the 20 ma signal level is set for the maximum slurry level expected on the probe, which is based on the probe depth position in the vessel.

» Essentially this is the only calibration adjustment required and it is highly recommended that no other settings be adjusted or changed without INSTEK CONTROL technical advisement. Probe calibration and programming is explained in the 'Calibrating the LTM-2' section below.

SUMPS

LTM-2 probes have great value in sump installations due to their level reading accuracy, short response time and not being affected by presence of froth-foam. There are many LTM-2 sump installations. Because sump slurry depth often fluctuates over the full sump depth, typically the probe is calibrated to measure over the full probe length.

» During normal operations slurry agitation will scour away any solids buildup on the probe. However, during shutdowns, particularly when the sump is emptied, solids can dry on the probe. Because sump levels fluctuate rapidly, particularly upon startup, it is advised the probes be washed down during lengthy shutdowns (2 hours or more) so they are immediately responsive to pulp levels as opposed to waiting for the slurry to scour dried solids buildup off the probe.

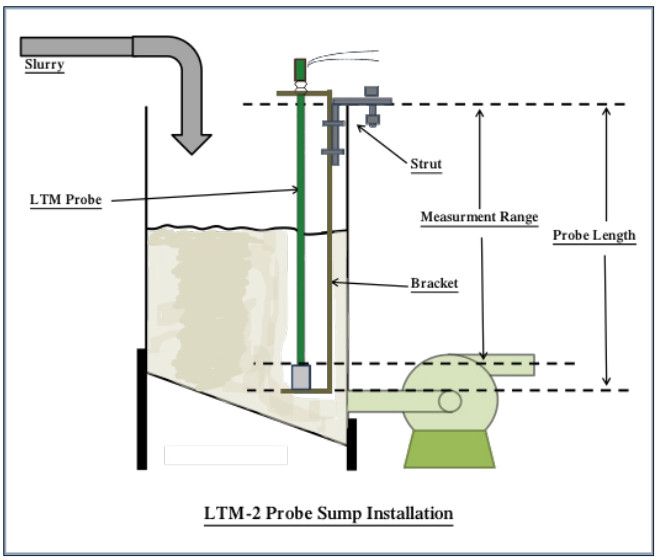

Figure 6: LTM-2 sump box installation schematic

» The LTM-2 probe bracket is installed in the sump via the bracket's L mounting tab as described in the flotation section above (**Figure 6**). Probe positioning:

- End of probe bracket should be located anywhere on sump at a position just above the sump discharge pipe.
- Locate the probe away from the sump feed pipe(s) to minimize splashing and turbulence although the probe can tolerate some turbulence. To minimize wear, locate probe in sump as far away from sump discharge pipe as possible.

» Probe length sizing simple and straightforward:

- Measure the sump wall depth from the top of the sump wall to the top of the sump discharge pipe. If the sump bottom is sloped and it is not possible to locate the probe near the discharge pipe, measure the depth to the sump bottom if that is above the discharge pipe. This is the H length.
- Determine where the probe bracket will be attached to the sump or its steel structure to electrically maintain a reference current. Measure how high above the sump wall the top of the probe will be located. As referenced in the flotation installation instructions, there is no predetermined attachment point on the probe bracket. There is some L mounting tab vertical position latitude and probe installation flexibility to ensure proper final probe position. This is the H+ length.

Figure 7: LTM-2 secondary mill sump application

$$L = H + H+$$

where L = probe length required, mm
H = sump depth from tank top to top of discharge pipe, mm
H+ = probe length above sump top, mm

» Solids that might have dried on the probe during shutdowns will be washed away by agitating slurry upon startup; however there could be a little insensitivity during the initial period until the probe is 'cleaned'. Based on operational experiences it is recommended that the sump probes be washed down prior to restarts so the probe is immediately responsive upon startup.

» It is recommended to periodically wash down the upper exposed part of the probe where there is a tendency for solids caking when insufficient slurry agitation cannot wash off the solids. This often happens as the LTM-2 probe level readings improve sump level control.

» Mounting the LTM-2 probe and bracket inside a poly pipe (non-conductive) will minimize wear from coarse particles. Successful installations use heavy poly piping with large holes drilled randomly along the entire pipe length to ensure rapid equalize pulp level equalization to the actual sump level.

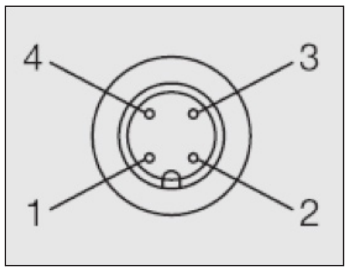

Figure 8: Configuration of M12-plug

1. +Supply
2. -Supply (4-20 mA)
3. Data link to PC interface, must not be connected
4. Data link to PC interface, must not be connected

ELECTRICAL CONNECTION

» **Attention**: Do not shorten the sensor rod.

» To guarantee a trouble-free function the power supply cable as well as the signal cable should be shielded and grounded at the electrical control box.

The configuration of the M12-plug can be seen in **Figure 8** and illustrations for connecting the 2-wire system can be seen in **Figures 9** and **10.**

NOTE: The LTM-2 sensor is a 2-wire sensor with 4-20 mA output signal. The use of a cable with internal LEDs will cause a measurement error (see **Figure 11**).

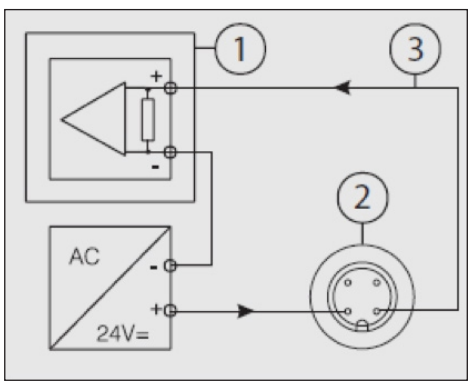

Figure 9: Connecting 2-wire system

1. PLC
2. M12-plug
3. 4-20 mA Current loop

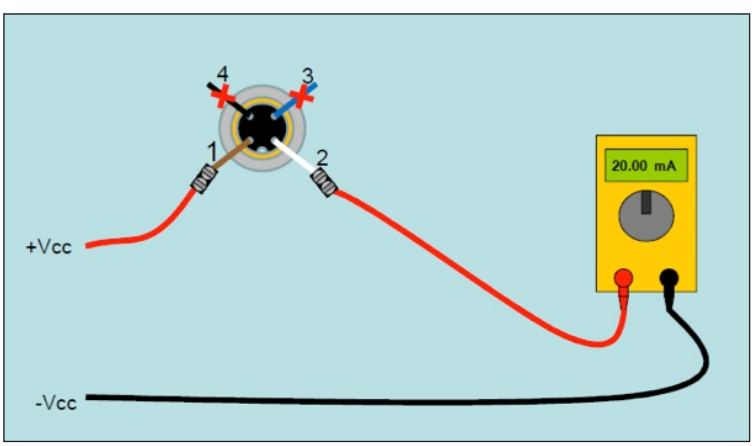

Figure 10: Illustration of correct LTM-2 electrical wiring connection

Figure 11: M12-plug with LED

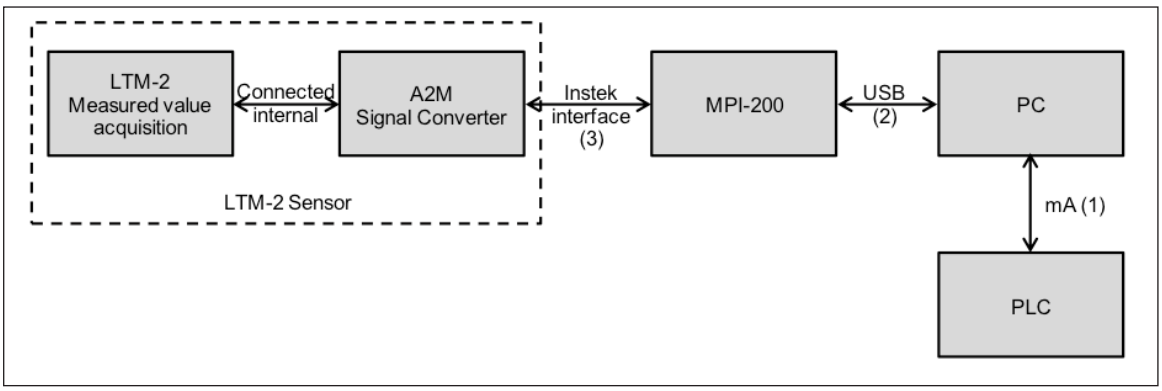

Figure 12: Signal flow during parameterisation

PROBE CALIBRATION PROCEDURE

The LTM-2 probe must be set up prior to use. This section provides information on the setup and parameter adjustments. The flow of signal during the parameterisation process is depicted in **Figure 12**.

1. Connect the programming adaptor to your computer. An MPI-200 picture is provided in **Figure 13**. The MPI-200 connects the LTM-2 level probe to a computer. Calibration and programming is done on the computer. **Figure 14** defines each connection.
2. Allow software to be installed on computer, when using the software on a Windows 7 or 8 platform, a VCP (Virtual Com Port) patch may be needed (downloaded) for connection and operation
3. Open the shortcut that was created on your desktop **Figure 15** (Screwdriver Icon):
4. Connect the LTM-2 probe via the M12 connector on the programming adaptor.

   NOTE: When connecting to a computer, connection 1 (External Power Supply) is not required for correct operation.

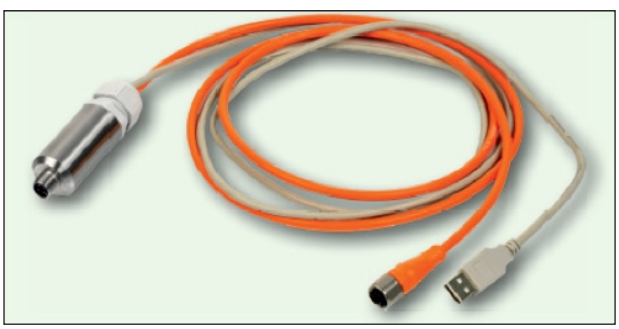

Figure 13: Programming adapter MPI-200

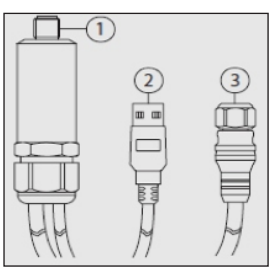

1. External power supply via M12-plug (optional)
2. USB port for connection to PC incl. power supply if not supplied external

Figure 14: Connection of programming adapter MPI-200

Figure 15: LTM-2 Desktop Tool

5. If the software is correctly installed, the software will find the level probe and the screen will display the “trees” user interface (**Figure 16**). If the probe is not detected, the trees menu will not appear, click on the third icon at the top of the software connect screen (red plug) to attempt connection.

6. If using a language other than English, can change to native language under ‘User Interface’ by expanding the ladder and clicking and selecting the language desired. See **Figure 17**.

7. Opening the ‘Interface A2M 4-20mA 2-w’ tree will expand to ‘#’ and a ‘Current Loop Signal’ tree.

8. Opening the ‘Current Loop Signal’ tree will expand the menu into several submenu parameters that are the core probe operation settings. See **Figure 18**. Description of each parameter is provided below. Adjusting and changing these setpoints from the factory settings is explained in 10) below.

   NOTE: The 4-20 mA range settings can be done in either % or mm units, with mm typically factory set. Should the units be in % and not in mm, you need to select the level measurement tree on the front page, access the Continuous Level tree and proceed to “Physical Unit”. Here the probe unit can be changed in different units, namely mm, %, inches and feet. Select mm.

   a. **4 mA set point –** This is the slurry level low point at bottom of probe and the typical factory setting is 0 mm. The 4 mA set-point typically should be set at the top of the footer fitting, or 40 mm. While can operate the probe with 0 mm setting, using 40 or higher value (be sure the operating slurry level is above setpoint selected) will result in decreased total physical span, therefore increasing measurement resolution.

   b. **20 mA Set point –** This represents the highest slurry height and measuring point on the probe, which typically is the froth lip height, or for sumps, the total wall height. While this can be set to measure over the entire probe length (setting at 100%), improved measurement resolution is obtained if this value is set to expected highest slurry height in mm. The 20 mA height can be higher than actual lip height or sump wall depth but should not be shorter or probe operation error signals can be triggered.

   c. **Wrng-Sig: no Media –** When no slurry detected by the probe this function will trigger an error. Factory setting is 3.95 mA but can be changed to customer preferred out of range set point.

   d. **Err-Sig: Global Failure –** If the probe fails completely for any reason such as breakage, probe excessively scaled or caked, etc. the probe will transmit the global failure set value. The factory setting for the error signal global failure set point is 21.20 mA, but this can be changed to customer preference.

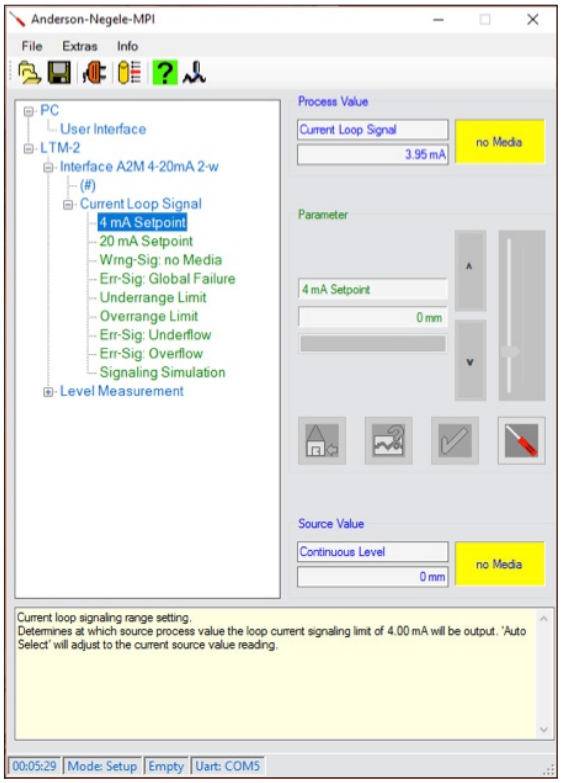

Figure 16: Display of parameter adjustment screen.

Figure 17: Language Setting

e. **Underrange Limit –** This is similar to the 'Wrng-Sig: no Media' function and can use the same setpoint value. Factory setting is 3.95 mA but can be changed to customer preferred setpoint.

f. **Overrange Limit –** This function signals and error when the slurry level is higher than the 20 mA setpoint height. The factory setting for this function is 20.05 but can be changed to customer preferred setpoint.

g. **Err-Sig Underflow –** Function errors when slurry level depth decreases below 4 mA setpoint. Factory setpoint is 3.95 mA, which is same as 'Wrng-Sig: no Media', and can be changed to customer preferred setpoint.

h. **Err-Sig Overflow –** Practically the same as 'Overrange Limit' which is factory set at 20.05 mA but can be changed to customer preferred setpoint. This value should be equal to the 'Overrange Limit' setpoint.

i. **Signaling Simulation –** Function is used to simulate the probe on your computer. This function allows the opportunity to see if they output of the probe corresponds to the value they need in mA compared to the device range set up.

9. To adjust any of the parameters above, open the parameter, press on the red screw driver on the right-hand side of the screen, the adjust page will appear. The arrows up and down can be used to select the required value. After selecting the units desired a green check mark will show on the page, accept by clicking on the green check mark.

   Alternatively, the value can be a keyboard entry in the yellow box located immediately below the current setpoint value. After the new setpoint has been inputted, **the keyboard enter button must be pressed**. Once the enter button has been pressed that accepts the value the green check mark on the page needs to be clicked with mouse to accept the value into the probe.

10. Once all parameters have been reviewed, set and accepted the probe can be disconnected from the MPI-200 cables and installed in the plant.

11. Most other parameters on the probe are password protected and inaccessible. Even if accessible, THESE MUST NOT BE ADJUSTED. MANY OF THESE ARE FACTORY CALIBRATIONS SPECIFIC TO THE INDIVIDUAL PROBE SUPPLIED AND CHANGING THESE WILL AFFECT PROBE PERFORMANCE.

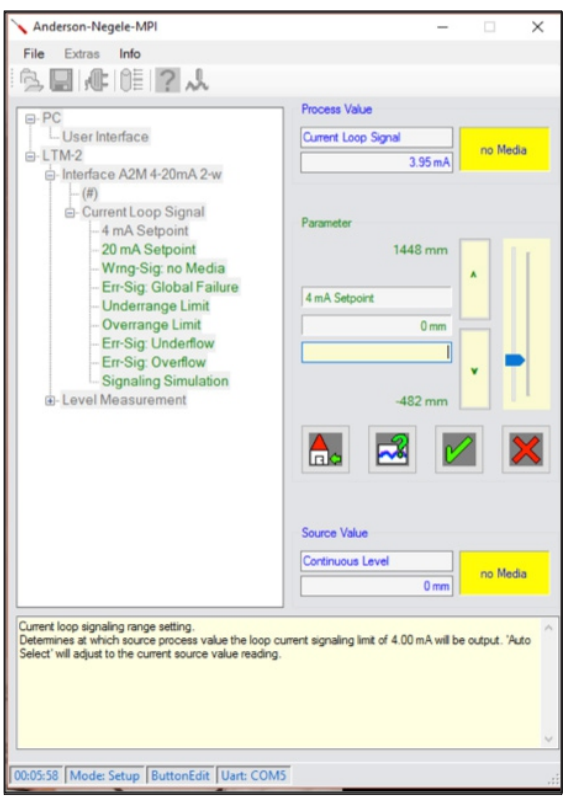

Figure 18: Changing parameter settings

LEVEL MEASUREMENT MENU AND SUBMENUS

The LTM-2 default settings are for operation with aqueous media and generally do not require adjustment. There are cases, however such as media characteristics, special tank contours (with internal structures such as a pipe) and sensitivity adjustments, some adjustment to the parameters may improve the LTM-2 probe's performance and response. See **Figure 19.**

Froth Sensitivity Adjustment (Dampening): Depending on froth-foam conditions, froth-slurry interface level measurement may be erratic and adjusting sensitivity can improve performance. Factory setting is -0.5 and can be either adjusted up or down by on step in a 0.25 increment.

ALL OTHER SETTINGS: These relate to prevention of signal jumps in turbulent slurries, etc. Rarely necessary to adjust. **Only change this while in direct communication with INSTEK CONTROL**

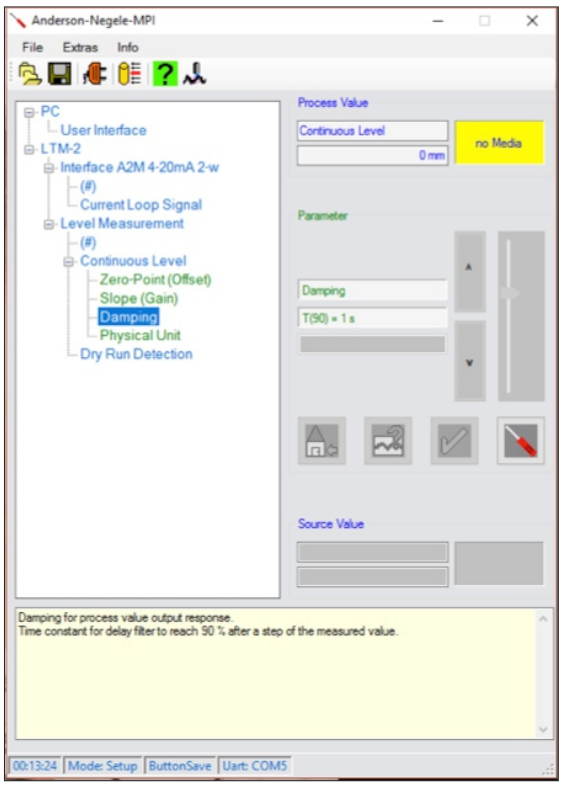

Figure 19: Continuous Level Measurement Menu

MAINTENANCE CONSIDERATIONS

» Please note that once installed, the probe needs little to no running maintenance. Mechanical issues generally are related to probe breakage or excessive wear.

» Because the probe works on conductance principle, when the flotation cell/ sump is drained and adhering non-conductive solids dry on the probe, upon startup the response time will be slow initially until the solids are wetted and scoured off the probe. Once the product on the probe has become properly wetted again, the response of the probe will return to normal. To minimize cell and sump upsets after extended shutdowns when solids can dry on the probe, washing down the probes at shutdown will eliminate lag time startup issues.

» Scale build up on the probe can be removed with dilute acid compatible with 304 stainless steels (probe material of construction).

» **Please note:** In case of using pressure washers, do not point nozzle directly to electrical connections.