TWS2500HD

2500 BHP Triplex Plunger Pump

Well Service Duty

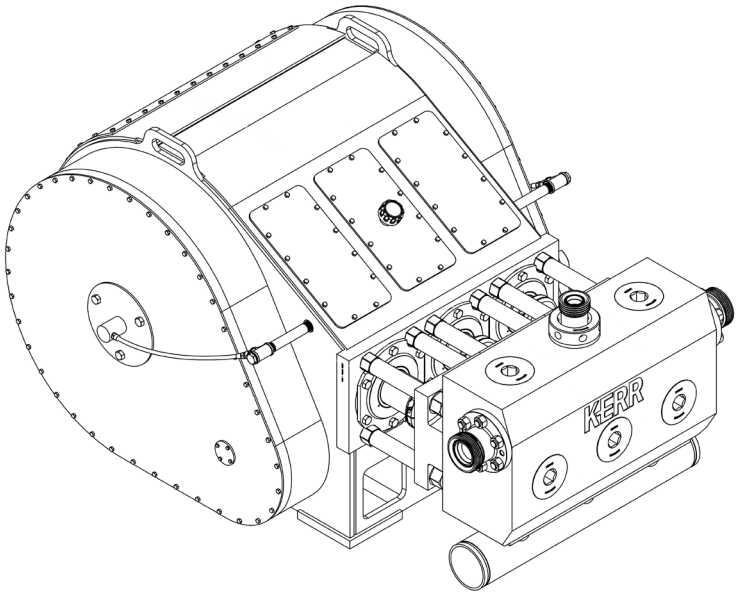

SPECIFICATIONS

Configuration	Horizontal Triplex Plunger
Number of Plungers	3
Stroke Length	8” / 203 mm
Frame Load Rating	225,000 lbs
Fluid Cylinder Pressure Rating	See Chart
Pump Weight (Avg.)	12400 lbs / 5625 kilos
Kerr Max Speed	330 RPM
API-674 Max Speed	310 RPM
Minimum Speed	50 RPM
Mechanical Efficiency (Bare Shaft)	90%
Lube System (Standard)	Pressure Feed
Lube Oil Capacity	Dry Sump
Lube Oil Type	Petroleum per AGMA 5EP (ISO 220)
Connection Sizes	6” Victaulic Groove Suction 2” FIG 1502 Fem Discharge

FLUID END

Forged Alloy Steel (4330 VM)
Forged Stainless Steel (17-4 PH)

VALVES

Wing Guided Insert With O-Ring Seat	

PLUNGERS

Colmonoy 730 Hard Coat
Black Gold

* Consult Factory for Authorized Drawings for Dimensions

1) Displacement is based on 100% Volumetric Efficiency (VE)

2) Consult factory for operating speeds above maximum shown

TWS2500HD

2500 BHP Triplex Plunger Pump

Well Service Duty

TWS2500HD

PLUNGER		DISPLACEMENT AT CRANKSHAFT RPM / PINION RPM @ MAXIMUM DISCHARGE PRESSURE									
DIAMETER	PER REV	50	318	125	794	200	1271	300	1906	330	2096
inch	GPM//REV	GPM	PSI	GPM	PSI	GPM	PSI	GPM	PSI	GPM	PSI
mm	*liter/rev*	*lpm*	*kg/cm 2*	*lpm*	*kg/cm 2*	*lpm*	*kg/cm 2*	*lpm*	*kg/cm 2*	*lpm*	*kg/cm 2*
4.0	1.306	65.3	17905	163	17905	261	14769	392	9846	431	8951
101.6	*4.94*	*247*	*1259*	*618*	*1259*	*988*	*1038*	*1483*	*692*	*1631*	*629*
4.5	1.652	82.6	14147	207	14147	330	11669	496	7780	545	7072
114.3	*6.25*	*313*	*995*	*782*	*995*	*1251*	*820*	*1876*	*547*	*2064*	*497*
5.0	2.040	102	11459	255	11459	408	9452	612	6301	673	5729
127.0	*7.72*	*386*	*806*	*965*	*806*	*1544*	*665*	*2317*	*443*	*2548*	*403*
5.5	2.468	123	9470	309	9470	494	7812	741	5208	815	4734
139.7	*9.34*	*467*	*666*	*1168*	*666*	*1869*	*549*	*2803*	*366*	*3083*	*333*
6.0	2.938	147	7958	367	7958	588	6564	881	4376	969	3978
152.4	*11.12*	*556*	*559*	*1390*	*559*	*2224*	*461*	*3336*	*308*	*3670*	*280*
6.5	3.448	172	6781	431	6781	690	5593	1034	3729	1138	3390
165.1	*13.05*	*653*	*477*	*1631*	*477*	*2610*	*393*	*3915*	*262*	*4307*	*238*

INPUT POWER					
BHP	758	1894	2500	2500	2500
Kw	565	1412	1864	1864	1864

* Consult Factory for Authorized Drawings for Dimensions

1) Displacement is based on 100% Volumetric Efficiency (VE)

2) Consult factory for operating speeds above maximum shown