Ventilated Industrial Electric Ovens for complex thermal cycles up to 500°C

OVEN TYPE
CD ADVANCED - 500

Sermac s.r.l.
OVENS AND INDUSTRIAL AUTOMATION
BRUSAPORTO (BERGAMO) ITALY
Tel +39 035687267 Fax +39 0356666868
www.sermac.it e-mail:uff.vendite@sermac.it

VENTILATED ELECTRIC OVENS *for complex heat cycles, where an extremely precise temperature control is required in heat cycles with working temperatures from 100°C to over 500°C.*

Main features:

- *Precision and uniformity of temperature with a dynamic control system to optimise the thermal balance, even with particularly complex loads*
- *Innovative stratified-laminar ventilation system to homogenise flows and accelerate the thermal process.*
- *Air exchange system with regulating valve.*
- *Electric heaters made from HT steel, designed for maximum thermal performance and optimal air circulation*
- *Innovative thermal insulation with double layer ceramic-based materials to ensure the oven has VERY LOW ENERGY CONSUMPTION*
- *High capacity oven base, insulated with ceramic materials*
- *The oven can be loaded with baskets, containers, crates, trolleys, etc. even of considerable weight*
- *Option for the supply of a dedicated loading cart including guide rails (optional)*
- *Oven chamber made entirely from thick, leak-proof stainless steel*
- *Bodywork with modern design and treated/painted steel*
- *Independent, direct, automatic thermal safety system.*
- *Programmable Thermostat, easy to use, convenient even for complex thermal cycles*
- *Designed to interface with a PC monitoring system EXPLORER 3000 type (optional)*

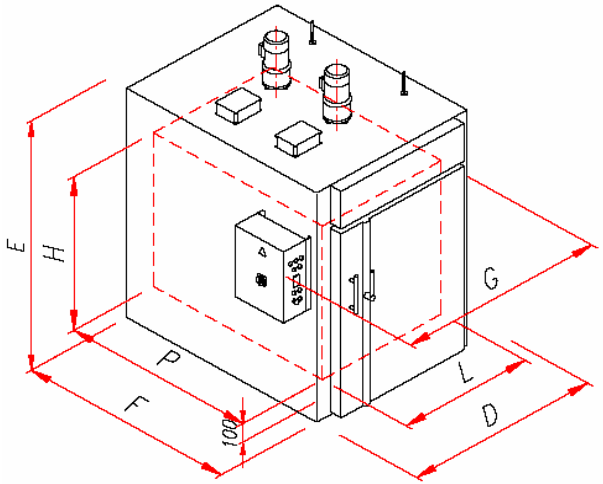

MODEL		CD 250 ADVANCED	CD 1000 ADVANCED	CD 1500 ADVANCED	CD 2000 ADVANCED	CD 3000 ADVANCED	CD 4000 ADVANCED
Chamber capacity	[Liters]	270	1200	1600	2300	3200	4000
Operation temperature	[°C]	450 (max 500)	450 (max 500)	450 (max 500)	450 (max 500)	450 (max 500)	450 (max 500)
Electric resistors power	[kW]	11	22	22	33	49	66
Air homogenizing fan	[kW]	0,75	1,1+1,1	1,1+1,1	1,1+1,1	2,2+2,2	2,2+2,2
Inner chamber dimensions	L [mm]	600	900	900	1250	1100	1400
	P [mm]	750	1440	1440	1250	1900	1440
	H [mm]	600	950	1250	1500	1650	2000
Overall dimensions	D [mm]	1100	1350	1350	1700	1600	1900
	E [mm]	2180	1900	2200	2500	2800	3100
	F [mm]	1350	2100	2100	1950	2600	2100
	G [mm]	1450	1650	1650	2000	1900	2200
Approximate weight	[Kg]	600	1100	1300	1600	2000	2400

SERMAC S.r.l. reserves itself the faculty to possibly apply technical or construction changes without notice