JOB No.	MASTER
DATE DRAWN	1/4/2019
DATE PRINTED	2/22/2019

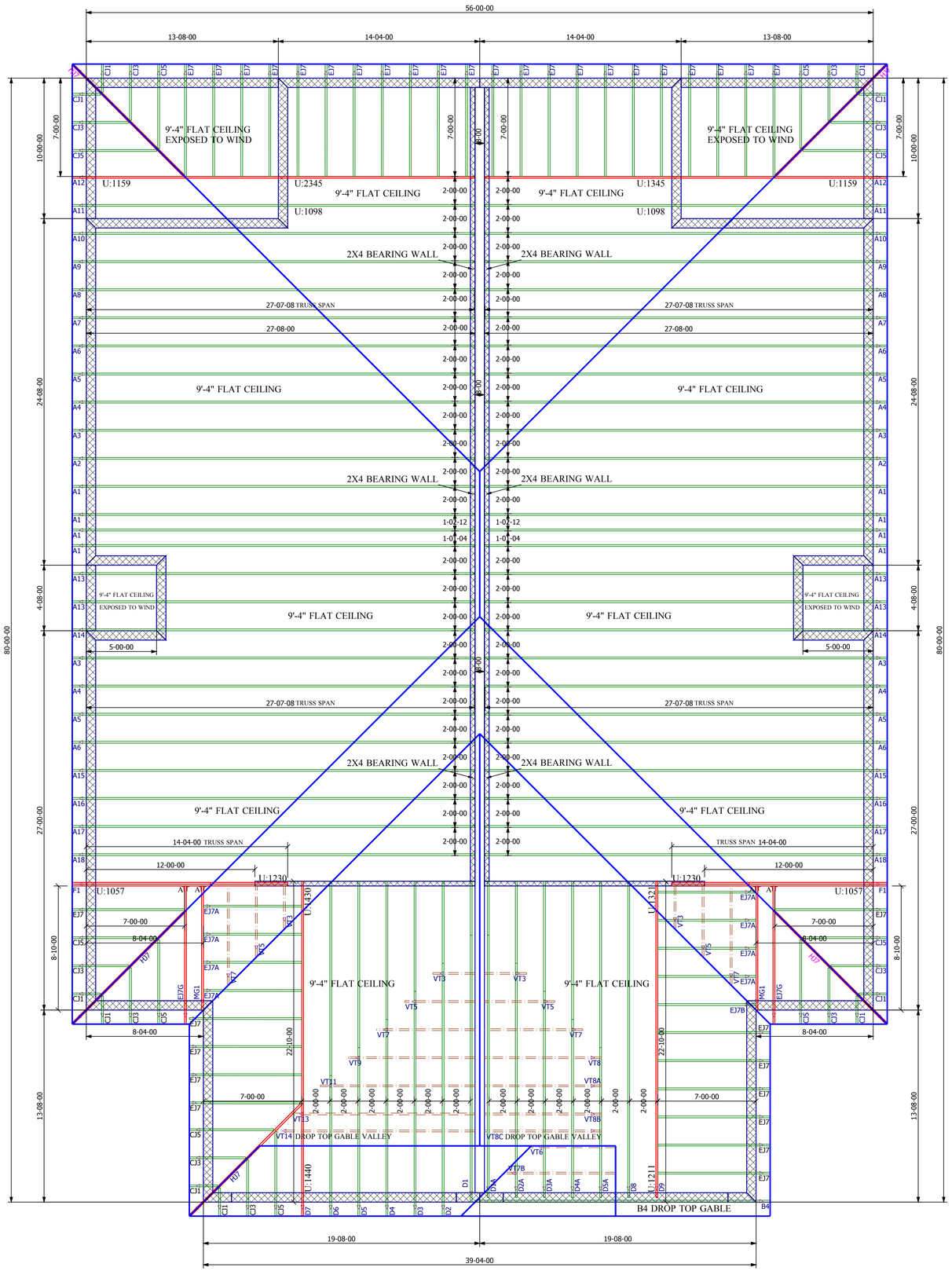

GENERAL TRUSS ENGINEERING CRITERIA & DESIGN LOADS	
DESIGN CODE	FBC2017/TPI2014
WIND CODE	MWFRS (Directional)/C-C HYBRID WIND ASCE 7-10
WIND LOAD	160 MPH
EXPOSURE CATEGORY	C
OCCUPANCY CATEGORY	II
IMPORTANCE FACTOR	1.0
WIND DURATION FACTOR	1.60
OPENING CONDITIONS	ENCLOSED
TRUSSES HAVE BEEN DESIGNED FOR A 10.0 PSF BOTTOM CHORD LIVE LOAD NONCONCURRENT WITH ANY OTHER LIVE LOADS	
TRUSS LOADING	ROOF
TCLL	20 PSF
TCDL	20 PSF
BCLL	0 PSF
BCDL	10 PSF
TOTAL	50 PSF
DURATION	1.25
TCDL / TO RESIST UPLIFT	5 PSF
BCDL / TO RESIST UPLIFT	5 PSF

CAUTION!!!

DO NOT ATTEMPT TO ERECT TRUSSES WITHOUT REFERRING TO THE ENGINEERING DRAWINGS AND BSCI-B1 SUMMARY SHEETS.

ALL PERMANENT BRACING MUST BE IN PLACE PRIOR TO LOADING TRUSSES. (ie. SHEATHING, SHINGLES, ETC.)

ALL INTERIOR BEARING WALLS MUST BE IN PLACE PRIOR TO INSTALLING TRUSSES.

REFER TO FINAL ENGINEERING SHEETS FOR THE FOLLOWING.

1) NUMBER OF GIRDER PLIES AND NAILING SCHEDULE.

2) BEARING BLOCK REQUIREMENTS.

3) SCAB DETAILS (IF REQUIRED)

4) UPLIFT AND GRAVITY REACTIONS.

WARNING
BACK CHARGES WILL NOT BE ACCEPTED REGARDLESS OF FAULT WITHOUT PRIOR NOTIFICATION BY CUSTOMER WITHIN 48 HOURS AND INVESTIGATION BY Builders First Source. NO EXECPTIONS.

THE GENERAL CONTRACTOR IS RESPONSIBLE FOR ALL CONNECTIONS OTHER THAN TRUSS TO TRUSS, GABLE SHEAR WALL, AND CONNECTIONS. TEMPORAY AND PERMANENT BRACING, AND CEILING AND ROOF DIAPHRAM CONNECTIONS.

ROOF PITCH	**5/12**
CEILING PITCH	**FLAT**
TOP CHORD SIZE	**2 x 4 MIN.**
BOTTOM CHORD SIZE	**2 x 4 MIN.**
OVERHANG LENGTH	**12"**
CANTILEVER	**N/A**
END CUT	**PLUMB**
FLOOR TRUSS SPACING	**N/A**
ROOF TRUSS SPACING	**24"**

BUILDER	**DR Horton**
PROJECT	**1526 Villa**
MODEL	**1526 A**
ADDRESS	**--**
CITY, STATE	**--, FL.**
LOT	**--**
SUBDIVISION	**--**
DRAWN BY	**D.W**
ENG. BY	**D.W**

BEARING HEIGHT SCHEDULE

- 9'-4" BEARING HEIGHT
- 8" BLOCK WALL TO ROOF

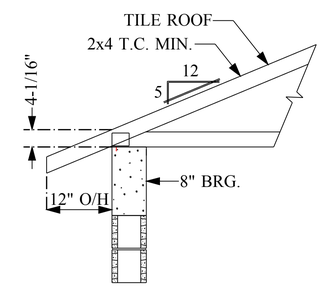

TYP. ROOF TRUSS END DETAIL
N.T.S.

REVISIONS

No	DATE	NOTES	BY
1	2/22/19	REMOVE LEDGER, REVISE TRUSS PLACEMENT.	D.W.

USP ROOF AND FLOOR TRUSS HANGER SCHEDULE

ID	QTY/RF	QTY/FL	MODEL	FLOOR	ROOF	UPLIFT	SYMBOL
A*	0	0	JUS24	725	895	490	A*
A	4	0	THD26	2940	3200 / 3600	1250 / 1555	A
B	0	0	THD28	3820	3895 / 4680	1235 / 2140	B
C	0	0	THD26-2	2940	3600	1515 / 2175	C
D	0	0	THD28-2	3820	4310 / 4680	1530 / 3485	D
E	0	0	THDH26-2	4355	5320	2155	E
F	0	0	THDH28-2	7460	7460	3235	F
G	0	0	THDH26-3	4355	5230	2155	G
H	0	0	THDH28-3	7460	7460	3235	H
I	0	0	THDH6710	9100	9100	4095	I
J	0	0		865	1055	765	J
K	0	0		865	1055	765	K
L	0	0		1440	1760	1250	L
M	0	0		1440	1760	1250	M
N	0	0		2680	3265	960	N
O	0	0	HJC26	2385	2980	1840	O
P	N/A	0	THD46	2790	3410	1550	P
Q	N/A	0	MSH422	2245	2245	1855	Q
R	N/A	0	MSH4221F	2245	2245	1855	R
S	N/A	0	MSH426	2435	2435	1855	S

NOTE: UPLIFT VALUE FOR THA422, THAC422, THA426 HANGERS APPLY ONLY TO FACE MOUNT ISTALATION

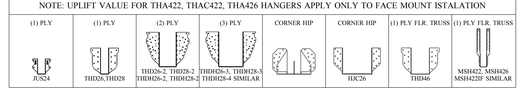

NOTES:
1) ALL DIMENSIONS ARE FEET-INCHES-SIXTEENTHS.
2) DO NOT CUT OR ALTER TRUSSES IN ANY WAY.
3) ALL REACTIONS ARE UNDER 5000 LBS. UNLESS NOTE OTHERWISE.
4) ALL UPLIFTS ARE UNDER 1000 LBS. UNLESS NOTED OTHERWISE.
5) FRAMING REQUIRED BELOW TRUSSES TO GET DESIRED CEILING CONDITIONS.
6) ONLY TRUSS TO TRUSS CONNECTIONS SUPPLIED W/ TRUSS PACKAGE.

IMPORTANT

This Drawing Must Be Approved And Returned Before Fabrication Will Begin. For Your Protection Check All Dimensions And Conditions Prior To Approval Of Plan.
SIGNATURE BELOW INDICATES ALL NOTES AND DIMENSIONS HAVE BEEN ACCEPTED.

By _____Date_____

Builders FirstSource
6850 Taylor Road Punta Gorda, Fl. 33950
Phone: 941-575-2250 / Fax:941-575-0319

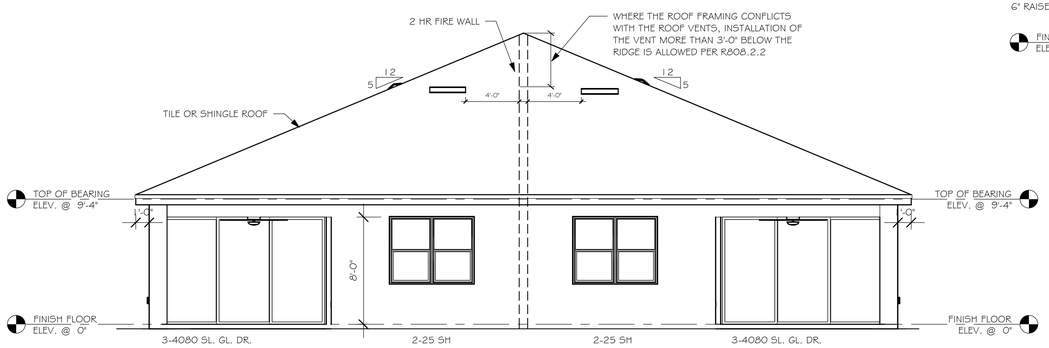

REAR ELEVATION
3/16" = 1'-0"

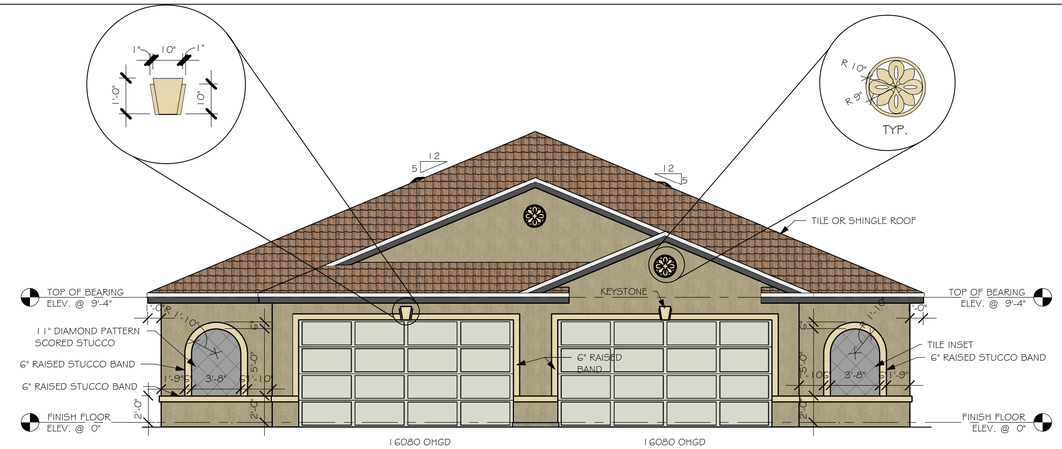

FRONT ELEVATION
3/16" = 1'-0"

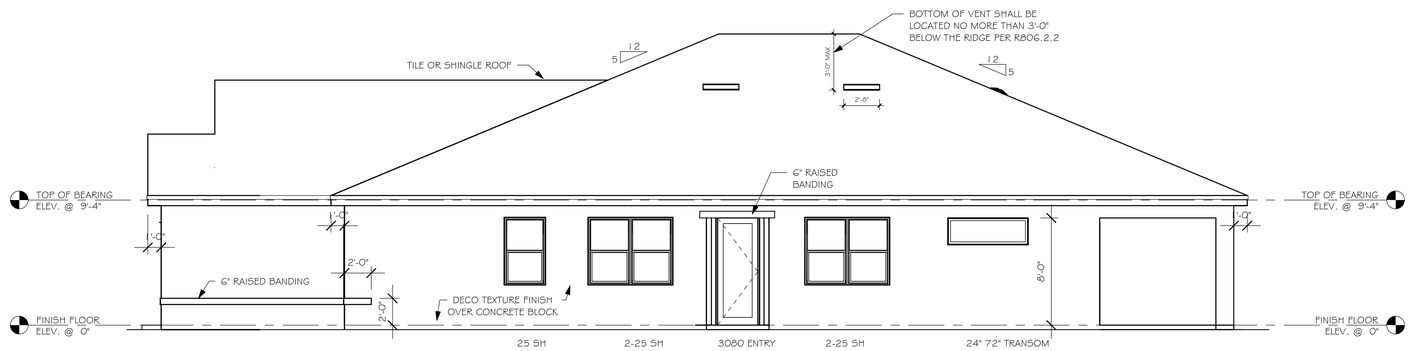

RIGHT ELEVATION
3/16" = 1'-0"

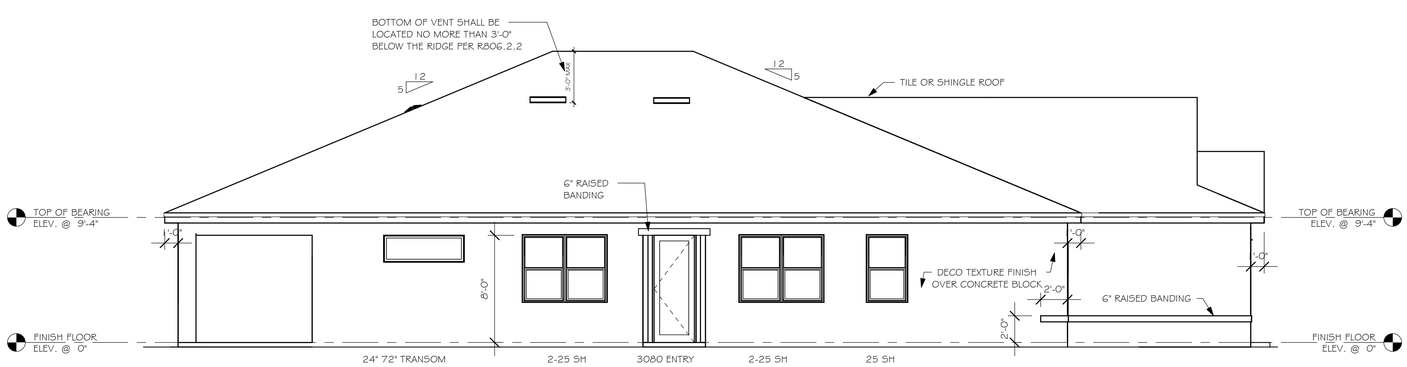

LEFT ELEVATION
3/16" = 1'-0"

No.	Description	Date
1	REVISE DIRECTION OF ROOF TRUSSES AT GARAGE TO AVOID BEARING ON FIREWALL. DEFINE 2 HOUR FIREWALL PER FBC721	03/07/19

DESIGN IN ACCORDANCE WITH THE RESIDENTIAL FLORIDA BUILDING CODE 2017 - 6TH EDITION

D·R·HORTON® America's Builder

Gulf Coast Drafting & Design, Inc.
EMAIL: PLANS@GULFCOASTDRAFTING.COM
PHONE: 239-540-1822
1515 SE 47TH ST. CAPE CORAL, FL 33904

STRUCTURAL SYSTEMS OF NORTH FLORIDA
1034 SE 47th ST. SUITE #3
CAPE CORAL, FL 33904
(239) 549-4554
CA# 8859

This signature and seal is for work performed by the Structural Engineer of Record only and does not extend to any other disciplines such as architectural, mechanical, plumbing, electrical, fire, life safety, accessibility, energy, site work, or any other work not within the scope of STRUCTURAL DESIGN.

LOT: 113-114
SUBDIVISION: WEST VILLAGES TVs
ADDRS: 20911-20917 FETTERBRUSH PL
D.R.H. #: 578950047-048

MODEL
1526 VILLA
GCD JOB # 10708

DATE: 01/16/19
DRAWN BY: JSL
CHECKED BY: JWC
REVISED: 1 03/07/19
PLAN: ELEVATION
SCALE: As indicated

A-1

Z:\MASTER\2018 BUILDERS\2018 DR HORTON\SUBDIVISION\WEST VILLAGES TV's\10708
LOT 113-114 1526 A\REVIT\10708 1526 A.rvt

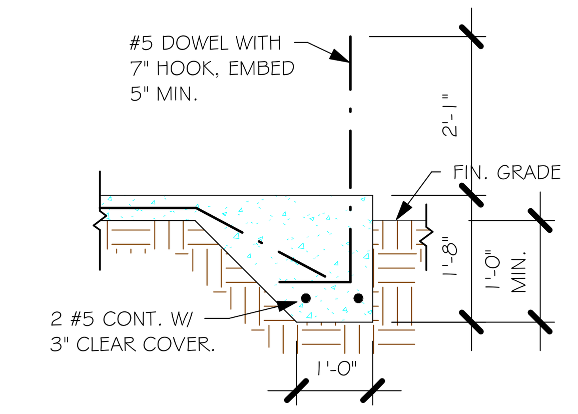

"F3" FOOTING
1/2" = 1'-0"

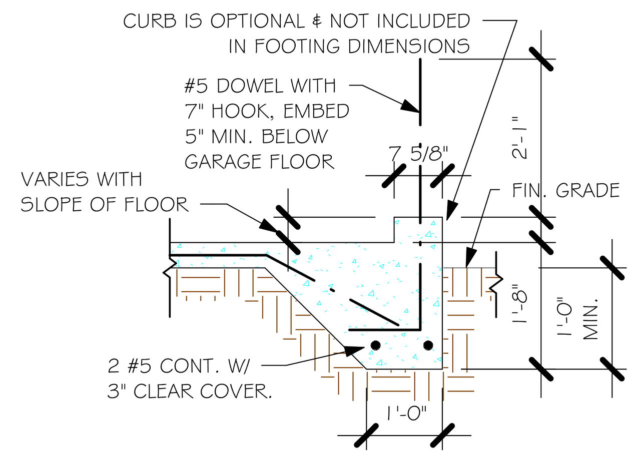

"F3" WITH CURB AT GARAGE
1/2" = 1'-0"

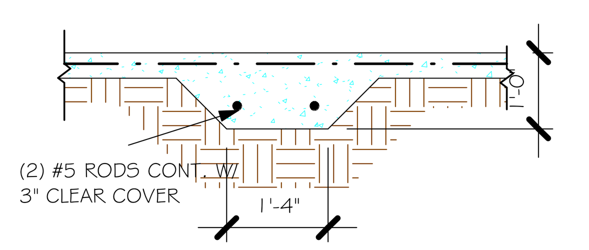

"F5" FOOTING
1/2" = 1'-0"

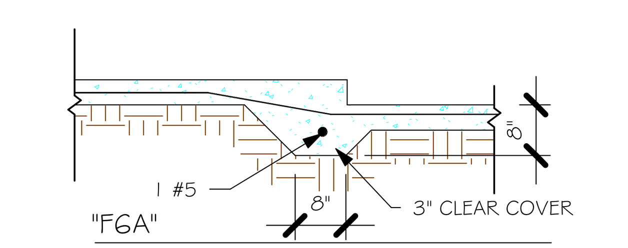

"F6A"
1/2" = 1'-0"

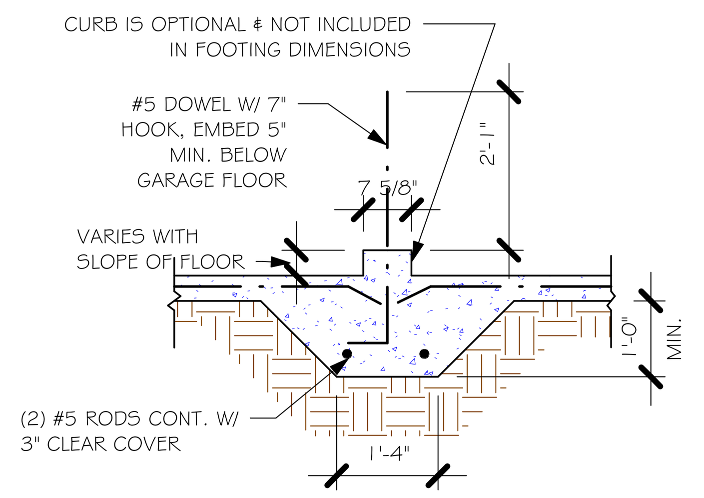

"F5" W/ CURB FOOTING
1/2" = 1'-0"

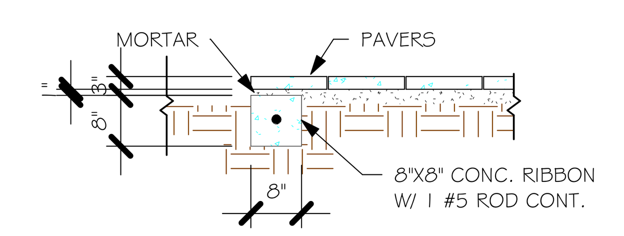

"P" PAVERS DETAIL ENTRY/ LANAI
1/2" = 1'-0"

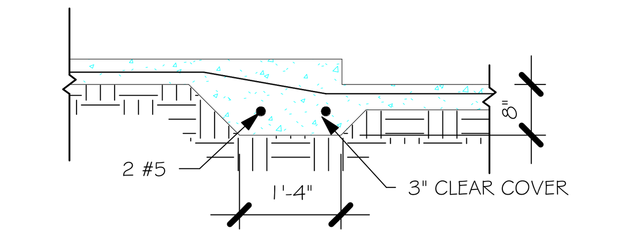

"F6" STEP DOWN
1/2" = 1'-0"

PAD FOOTING SCHEDULE

USED	TYPE	LENGTH	WIDTH	DEPTH	BOTTOM REINF.		REMARKS
					LONG WAY	SHORT WAY	
X	A	2'-6"	2'-6"	1'-0"	3-#5	3-#5	-
X	B	3'-0"	3'-0"	1'-0"	4-#5	4-#5	-
X	C	3'-6"	3'-6"	1'-0"	4-#5	4-#5	-
	D	4'-0"	4'-0"	1'-2"	5-#5	5-#5	-
	E	5'-0"	5'-0"	1'-2"	6-#5	6-#5	-

WALL FOOTING SCHEDULE

USED	TYPE	LENGTH	WIDTH	DEPTH	BOTTOM REINFORCING	SHAPE
	F1	CONT.	1'-4"	0'-8"	2-#5	
	F2	CONT.	1'-8"	0'-10"	2-#5	
X	F3	CONT.	1'-0"	1'-8"	2-#5	ADD CURB TO GARAGE, SEE DETAIL
	F4	CONT.	1'-4"	1'-8"	2-#5	
X	F5	CONT.	1'-4"	1'-0"	2-#5	
X	F6	CONT.	1'-4"	1'-0"	2-#5	
X	F6A	CONT.	0'-8"	0'-8"	1-#5	
	TE	CONT.	0'-8"	0'-8"	1-#5	

PROVIDE CORNER BARS PER 6/S-1

FOUNDATION PLAN

SCALE: 3/16" = 1'-0"

PLAN NOTES:

1. TOP OF GROUND FLOOR SLAB DATUM ELEVATION 0'-0"
2. "F#" DENOTES CONTINUOUS WALL FOOTING TYPE PER SCHEDULE THIS SHEET.
3. (#) DENOTES PAD FOOTING AT CONCENTRATED LOADS PER SCHEDULE THIS SHEET.
4. PROVIDE #5 VERTICAL REINFORCING AT DOT LOCATIONS SHOWN ON PLAN FROM FOOTING TO BOND BEAM.
5. ALL DIMENSIONS ARE TO OUTSIDE FACE OF MASONRY WALLS. SOME SLAB EDGES MAY EXTEND BEYOND FACE OF WALL.
6. FOR DIMENSIONS OF ROUGH OPENINGS IN MASONRY WALLS, COORDINATE WITH WINDOW/ DOOR SUPPLIER.
7. PROVIDE PRESSURE TREATED BUCKS AT WINDOWS/ DOORS PER DETAIL 7/S-1.

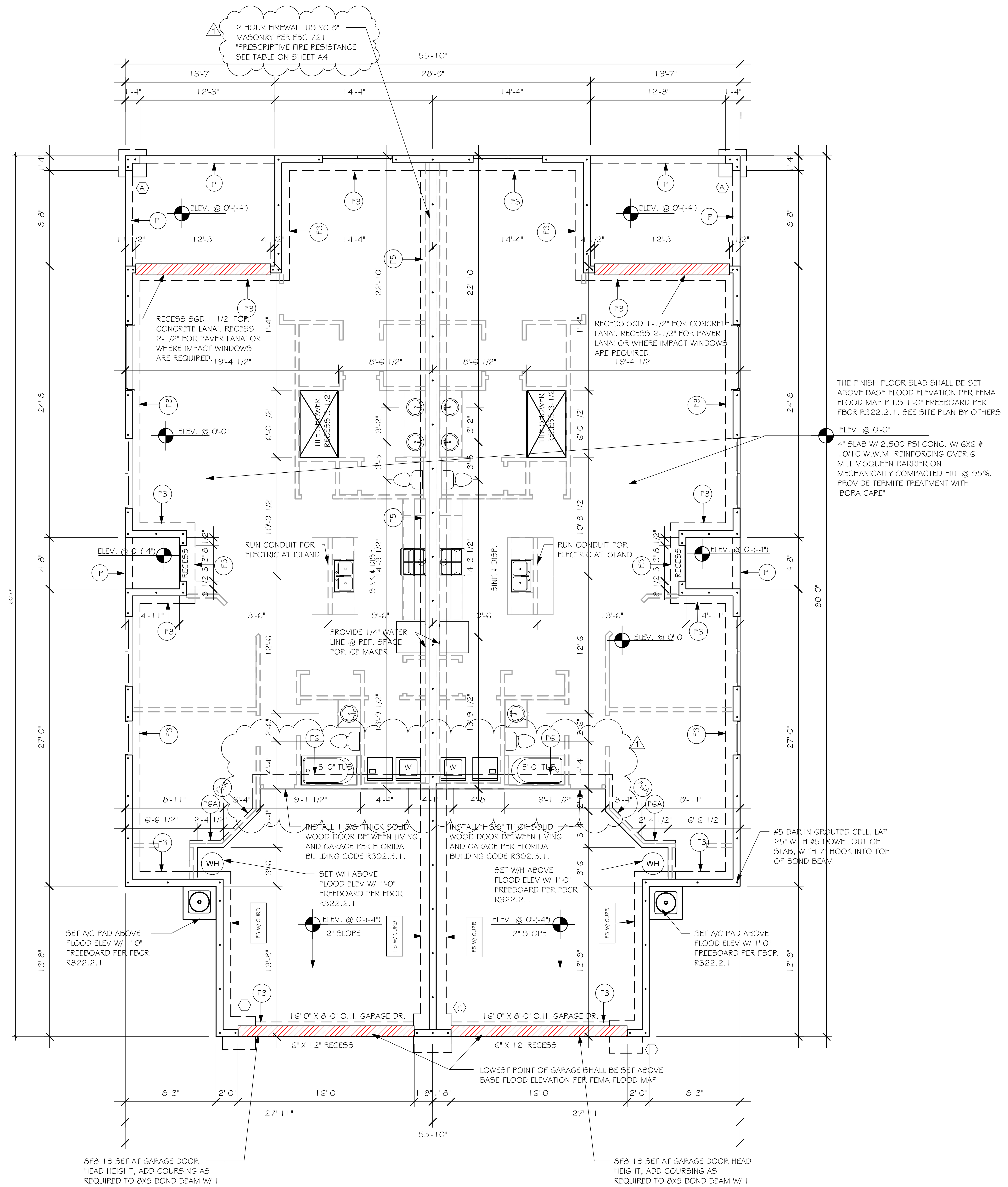

FOUNDATION PLAN
3/16" = 1'-0"

No.	Description	Date
1	REVISE DIRECTION OF ROOF TRUSSES AT GARAGE TO AVOID BEARING ON FIREWALL. DEFINE 2 HOUR FIREWALL PER FBC721	03/07/19

DESIGN IN ACCORDANCE WITH THE RESIDENTIAL FLORIDA BUILDING CODE 2017 - 6TH EDITION

D.R. HORTON America's Builder

Gulf Coast Drafting & Design, Inc.
EMAIL: PLANS@GULFCOASTDRAFTING.COM
PHONE: 239-540-1822
1515 SE 47th ST. CAPE CORAL, FL 33904

STRUCTURAL SYSTEMS

LOT: 113-114
SUBDIVISION: WEST VILLAGES TV's
ADDRS: 20911-20917 FETTERBRUSH PL
D.R.H. #: 578950047-048

MODEL
1526 VILLA
GCD JOB # 10708

DATE: 01/16/19
DRAWN BY: JSL
CHECKED BY: JWC
REVISED: 1 03/07/19
PLAN: FOUNDATION
SCALE: As indicated

A-2

Z:\MASTER\2018 BUILDERS\2018 DR HORTON\SUBDIVISIONS\WEST VILLAGES TV's\10708
LOT 113-114 1526 A\REVIT\10708 1526 A.rvt

DOOR SCHEDULE

TYPE MARK	DESCRIPTION	MANUFACTURER	HEIGHT	WIDTH	ZONE 4	ZONE 5	QTY
1	16080 OHGD	GARAGE DOOR	8'-0"	16'-0"	+28.2/-31.5	+28.2/-31.5	2
2	3080 ENTRY	DISTINCTION	8'-0"	3'-0"	+33.5/-36.3	+33.5/-44.8	2
3	(3)-4080 SL. GL. DR.	DISTINCTION	8'-0"	12'-0"	+29.4/-33.3	+29.4/-33.3	2

WIND PRESSURES PER ASCE7-10, 160 MPH, EXPOSURE C, AND CONVERTED TO ALLOWABLE STRESS DESIGN PRESSURES USING 0.6W LOAD FACTOR. Vasd=124 MPH

GARAGE DOOR ASSUMES 2' IN ZONE 5.

WINDOW SCHEDULE

MARK	DESCRIPTION	MANUFACTURER	HEIGHT	WIDTH	ZONE 4	ZONE 5	QTY
A	25 SH		5'-3"	3'-2"	+33.5/-36.3	+33.5/-44.8	2
B	2-25 SH		5'-3"	6'-4"	+33.5/-36.3	+33.5/-44.8	6
C	24"X72" FIXED GLASS		2'-0"	6'-0"	+33.5/-36.3	+33.5/-44.8	2

WIND PRESSURES PER ASCE7-10, 160 MPH, EXPOSURE C, AND CONVERTED TO ALLOWABLE STRESS DESIGN PRESSURES USING 0.6W LOAD FACTOR. Vasd=124 MPH

DOOR HEADERS

6'-8" BI-FOLD	HEADER HEIGHT	82" A.F.F.
6'-8" SWING	HEADER HEIGHT	82 1/2" A.F.F.
8'-0" SWING	HEADER HEIGHT	98 1/2" A.F.F.

PLAN NOTES

1) VERIFY ALL ROUGH OPENING DIMENSIONS FOR ALL WINDOWS AND DOORS

2) PROVIDE SAFETY GLAZING WITHIN 24" FROM EXIT PER FLORIDA BUILDING CODE R 308.4.2.

3) PROVIDE SAFETY GLAZING AT BATH/ SHOWER PER FLORIDA BUILDING CODE R 308.4.5.

4) NON BEARING INTERIOR FRAME WALLS SHALL BE FRAMED W/ WOOD OR METAL STUDS. SPACING SHALL NOT EXCEED 24" O.C. (NON BEARING WALLS ONLY)

5) PROVIDE DEAD WOOD IN ATTIC FOR OVERHEAD GARAGE DOOR HARDWARE

6) KITCHEN KNEE WALL TO BE FRAMED W/ TOP @ 34 1/2" A.F.F.

7) INSTALL SMOOTH WALLS IN KITCHEN AND ALL BATHROOM AREAS

8) WHERE DRYWALL CEILING IS APPLIED TO TRUSSES @ 24" O.C. USE 5/8" DRYWALL OR 1/2" SAG RESISTANT PER SEC. 702.3.5

9) THE GARAGE SHALL BE SEPARATED FROM THE RESIDENCE & ATTIC BY NOT LESS THAN 1/2" GYPSUM BOARD APPLIED TO THE GARAGE SIDE. GARAGES BENEATH HABITABLE ROOMS SHALL BE SEPARATED WITH NOT LESS THAN 5/8" TYPE "X" GYPSUM BOARD OR EQUIVALENT. WHERE THE SEPARATIION IS A FLOOR - CEILING ASSEMBLY, THE STRUCTURE SUPPORTING THE SEPARTION SHALL ALSO BE PROTECTED BY NOT LESS THAN 1/2" GYPSOM BOARD OR EQUIVALENT

10) INSTALL 1 3/8" THICK SOLID WOOD DOOR BETWEEN LIVING AND GARAGE PER FLORIDA BUILDING CODE R302.5.1.

11) ALL WINDOWS INSTALLED 72" ABOVE GRADE MUST COMPLY WITH R612.2 MIN 24" SILL HEIGHT OR PROVIDED WITH AN APPROVED WINDOW FALL PRVENTION DEVICE

12) ALL CLOSET SHELVES TO BE 12". ALL PANTRY & LINEN TO BE (4)-16" SHELVES 18" O.F.F. W/ 15" INCREMENT.

INTERIOR DOOR SCHEDULE

MARK.	DOOR WIDTH	NOTES
1	3'-0"	P.K. = POCKET DOOR
2	2'-8"	B.F. = BI-FOLD DOOR
3	2'-6"	B.P. = BI-PASS DOOR
4	2'-4"	L.V. = LOUVERED DOOR
5	2'-0"	
6	1'-8"	
7	1'-6"	
8	2'-11"	

SQUARE FOOTAGE UNIT 1

LIVING AREA	1,513
GARAGE AREA	433
LANAI AREA	146
FRONT PORCH/ ENTRY AREA	29
TOTAL SQUARE FOOTAGE	2,121

SQUARE FOOTAGE UNIT 2

LIVING AREA	1,513
GARAGE AREA	433
LANAI AREA	146
FRONT PORCH/ ENTRY AREA	29
TOTAL SQUARE FOOTAGE	2,121

CABINET BACKING

KITCHEN	UPPER TOP @ 84"	BASE TOP @ 35"
MASTER BATH	UPPER	BASE TOP @ 35"
GUEST BATH	UPPER	BASE TOP @ 31"
LAUNDRY ROOM	UPPER TOP @ 84"	BASE

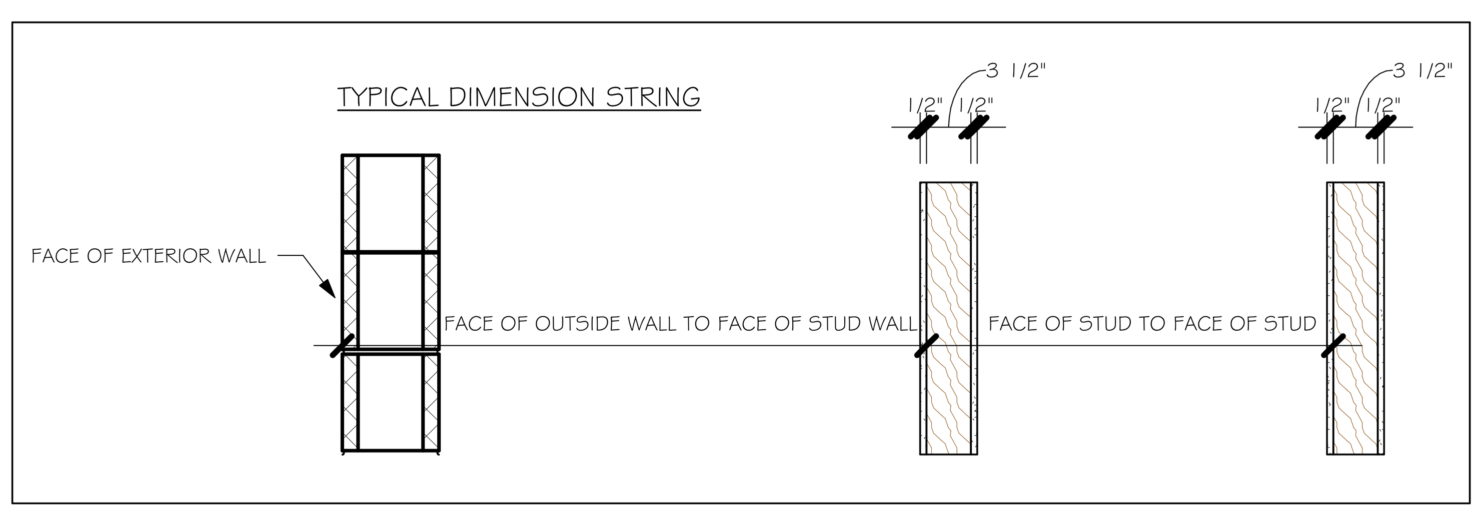

BATHROOM NOTES

TB	TOWEL BAR	ALL TUB DECKS @ 21" A.F.F
TP	TOILET PAPER	ALL BLOCKING TO BE PT IN SHOWERS

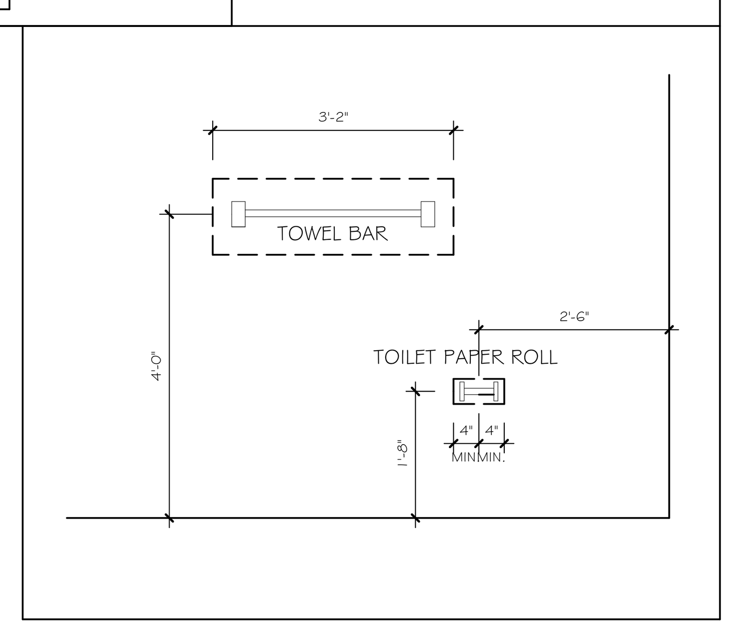

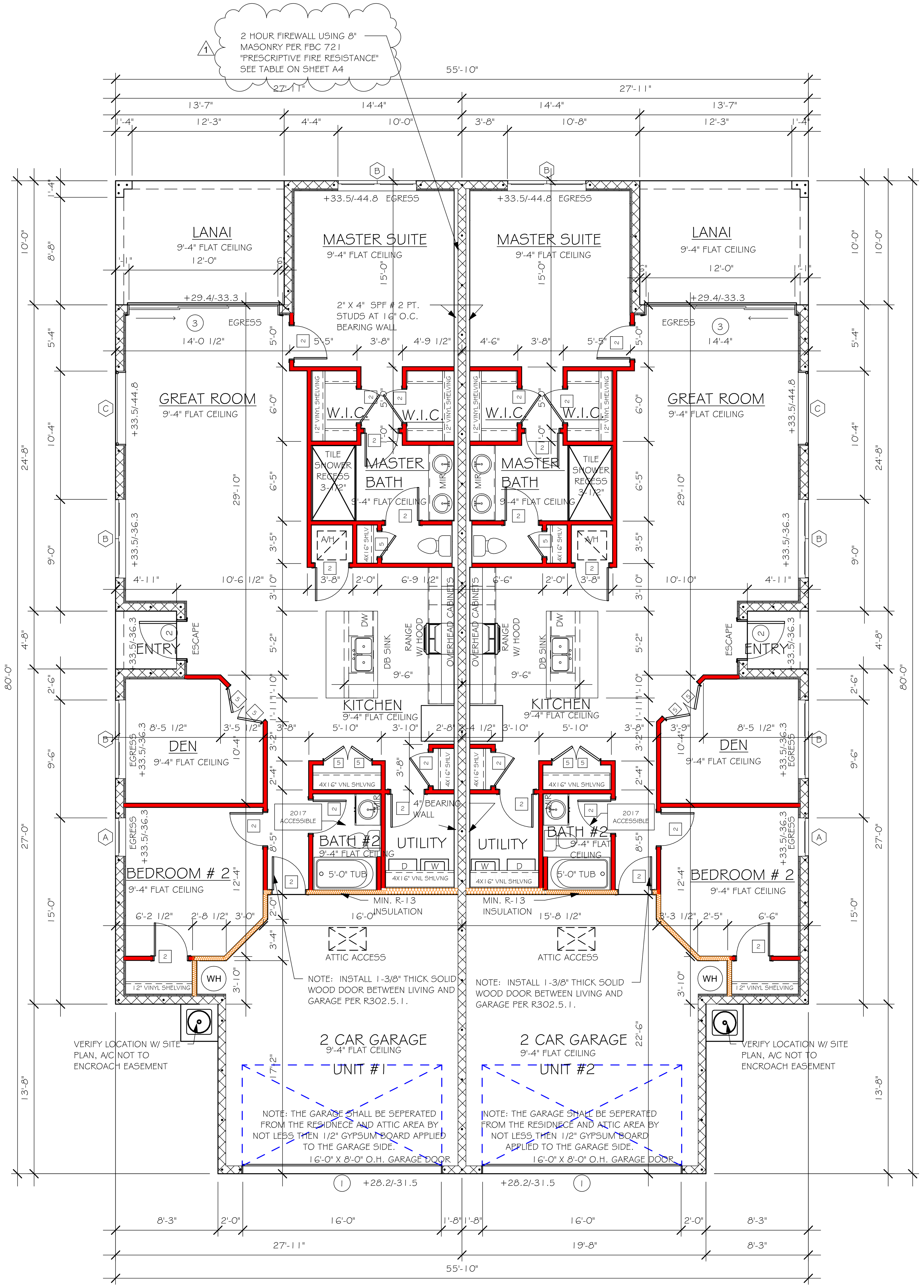

FLOOR PLAN
3/16" = 1'-0"

No.	Description	Date
1	REVISE DIRECTION OF ROOF TRUSSES AT GARAGE TO AVOID BEARING ON FIREWALL. DEFINE 2 HOUR FIREWALL PER FBC721	03/07/19

DESIGN IN ACCORDANCE WITH THE RESIDENTIAL FLORIDA BUILDING CODE 2017 - 6TH EDITION

D·R·HORTON America's Builder
Gulf Coast Drafting & Design, Inc.
EMAIL: PLANS@GULFCOASTDRAFTING.COM
PHONE: 239-540-1822
1515 SE 47th ST. CAPE CORAL, FL 33904
STRUCTURAL SYSTEMS OF NORTH FLORIDA

LOT: 113-114
SUBDIVISION: WEST VILLAGES TVs
ADDRS: 20911-20917 FETTERBUSH PL
D.R.H. #: 578950047-048

MODEL
1526 VILLA
GCD JOB # 10708

DATE: 01/16/19
DRAWN BY: JSL
CHECKED BY: JWC
REVISED: 03/07/19
PLAN: FLOOR
SCALE: As indicated

A-3

Z:\MASTER\2018 BUILDERS\2018 DR HORTON\SUBDIVISIONS\WEST VILLAGES TVs\10708 LOT 113-114 1526 A\REVIT\10708 1526 A.rvt

INSTALL HTA 16-18 AT ALL TRUSSES TO 1615 lb UPLIFT. FOR HIGHER UPLIFTS, SEE NOTES ON PLAN.

TRUSS STRAPPING TO MASONRY		
MAX TRUSS UPLIFT @ 24" OC (LBS)	CONNECTOR	FASTENER
1615	(1) HTA16-18	10-10dx1/2", EMBED 4"
1870	(1) HTA20	10-10dx1/2", EMBED 4"
2430 (1 PLY)	(2)HTA16- 18	10-10dx1/2", EMBED 4"
2800 (2 PLY)	(2)HTA16 -18	10-10dx1/2", EMBED 4"
3170 (2 PLY)	(2) HTA20	10-10dx 1/2", EMBED 4"
5005	HTT45	5/8"ø ATR, EPOXY 12"

NOTES:
1. PROVIDE A STRAP FROM THE ABOVE LIST AT EACH ROOF TRUSS BEARING POINT, BASED ON THE TRUSS UPLIFT VALUES IN THE SIGNED AND SEALED TRUSS DESIGN PACKAGE AND SUITABLE FOR THE GEOMETRY. EMBED STRAP ON -C/L OF WALL.
2. CONNECTORS ARE USP STRUCTURAL CONNECTORS. ALL CONNECTORS SHALL BE INSTALLED IN STRICT ACCORDANCE WITH USP PRINTED INSTUCTIONS. SUBSTITUTIONS MUST BE APPROVED IN WRITING BY THE ENGINEER OF RECORD.
3. WHERE EMBEDDED STRAPS ARE MISSING, OR MIS-LOCATED, INSTALL RETROFIT STRAP PER 10/S-1.
4. ' ATR' = ALLTHREAD. DRILL AND EPOXY WITH USP EPOXY PER MFR. INSTRUCTIONS.

REV2

INSTALL AT ALL TRUSSES TO 1005 lb UPLIFT. FOR HIGHER UPLIFTS, SEE NOTES ON PLAN.

TRUSS STRAPPING TO STUDWALL/ WOOD BEAM		
MAX TRUSS UPLIFT @ 24" OC (LBS)	CONNECTOR	FASTENER
1005	(1)MTW16	12-10dX1~1/2"
2010	(2) MTW16	12-10dX1~1/2"
3015	(3) MTW16	12-10dX1~1/2"
1285	(1) HTW20	24-10dX1~1/2"
2570	(2) HTW20	24-10dX1~1/2"
3855	(3) HTW20	24-10dX1~1/2"
5140	(4) HTW20	24-10dX1~1/2"

NOTES:
1. PROVIDE A STRAP FROM THE ABOVE LIST AT EACH ROOF TRUSS BEARING POINT, BASED ON THE TRUSS UPLIFT VALUES IN THE SIGNED AND SEALED TRUSS DESIGN PACKAGE.
2. CONNECTORS ARE USP STRUCTURAL CONNECTORS. ALL CONNECTORS SHALL BE INSTALLED IN STRICT ACCORDANCE WITH USP PRINTED INSTUCTIONS.

REV2

2 HOUR FIREWALL USING 8" MASONRY PER FBC 721 "PRESCRIPTIVE FIRE RESISTANCE" (1)

F.B.C. TABLE 722.3.2

MINIMUM EQUIVALENT THICKNESS[1] (IN) BEARING OR NON-BEARING CONCRETE MASONRY WALLS

TYPE OF AGGREGATE	FIRE - RESISTANCE RATING (HOURS)			
			2	
1. PUMICE OR EXPANDED SLAG			3.2	
2. EXPANDED SHALE, CLAY OR SLATE			3.6	
3. LIMESTONE, CINDERS, OR EXPANDED SLAG			4.0	

1. STANDARD 8" HOLLOW MASONRY HAS 4.0" EQUIVALENT SOLID THICKNESS. THEREFORE ANY OF THE LISTED AGGREGATES ARE ALLOWED.
2. NOTE: CALCAREOUS OR SILIEOUS GRAVEL IS A 4TH TYPE WHICH IS NOT ALLOWED

MODEL 1526 VILLA (EACH UNIT): ATTIC VENTILATION FBCR R806

COORDINATE VENTING REQUIREMENTS WITH ENERGY CALCULATIONS

AREAS (SQ. FT.)			SOFFIT ONLY (1/150) (NO ROOF VENTS) — ATTIC VENTILATION REQUIRED			WITH ROOF VENTS (1/300) (R.V.) — ATTIC VENTILATION REQUIRED		
MARK	ATTIC	SOFFIT	ATTIC AREA/150	REQ'D AIR FLOW OF SOFFIT	QUAD 4 SOFFIT HAS	ATTIC AREA/300	QUANTITY OF ROOF VENTS	MIN AIR FLOW OF SOFFIT
1st STORY	2100.0 SQ. FT.	137.3 SQ. FT.	14.0 SQ.FT.	10.20%	8.15%	7.0 SQ. FT.	3	2.98%
			"SOFFIT ONLY" DOES NOT QUALIFY			ROOF VENTS ARE REQUIRED		
			SOFFIT MODEL ACM QUAD 4, FULL VENT, NARROW PATTERN, 8.15% FREE AIR FLOW			ROOF VENT MODEL 32" BASE, 22-3/8" BASE LOMANCO 770-D 0.97 SQ. FT. FREE AIR		

FIRE RESISTANCE RATINGS - ANSI/UL 263 (BXUV)

Design No. U301	Bearing Wall Rating 2 HR.	Finish Rating 66 Min.

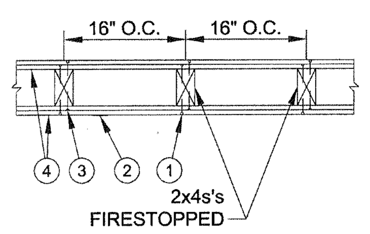

1. **Nailheads** - Exposed or covered with joint finisher.
2. **Joints** - Exposed or covered with fiber tape and joint finisher. As an alternate, nominal 3/32 in. thick gypsum veneer plaster may be applied to the entire surface of Classified veneer baseboard. Joints reinforced.
3. **Nails** - 6d cement coated nails 1-7/8 in. long, 0.0915 in. shank diam, 1/4 in. diam heads, and 8d cement coated nails 2-3/8 in. long, 0.113 in. shank diam, 9/32 in. diam heads.
4. **Gypsum Board** - * - 5/8 in. thick , two layers applied either horizontally or vertically. Inner layer attached to studs with the 1-7/8 in. nails spaced 6" o.c. Outer layer attached to studs over inner layer with the 2-3/8 in. long nails spaced 8" o.c. Vertical joints located over studs. All joints in face layers staggered with joints in base layers. Joints of each base layer offset with joints of base layer on opposite side.
When used in widths other than 48 in., gypsum board to be installed horizontally.
When Steel Framing Members* (Item 6) are used, base layer attached to furring channels with 1 in. long Type S bugle-head steel screws spaced max. 24 in. o.c.; face layer attached with 1-5/8 in. long Type S bugle-head steel screws spaced max. 12 in. o.c.
AMERICAN GYPSUM CO - Types AG-C, AGX-11, AGX-C.
BEIJING NEW BUILDING MATERIALS CO LTD - Type DBX-1.
CERTAINTEED GYPSUM, INC.- Types 1, FRPC, EGRG, ProRoc Type C or ProRoc Type X.
CERTAINTEED GYPSUM CANADA, INC. - ProRoc Type C, ProRoc Type X, ProRoc Type Abuse-Resistant.
CANADIAN GYPSUM COMPANY - Types AR, C, IP-AR, IP-X1, IP-X2, IPC-AR, SCX, SHX, WRC, WRX.
G-P GYPSUM CORP, SUB OF
GEORGIA-PACIFIC CORP - Types 5, 9, C, DAP, DD, DA, DGG, DS, GPFS6.
LAFARGE NORTH AMERICA INC - Types LGFC-C, LGFC2, LGFC2A, LGFC6, LGFC6A, LGFC-C/A.
NATIONAL GYPSUM CO - Types FSK, FSK-C, FSK-G, FSW, FSW-3, FSW-C, FSW-G.
PABCO GYPSUM, DIV OF
PACIFIC COAST BUILDING PRODUCTS INC - Types C, PG-2, PG-3, PG-3W, PG-4, PG-5, PG-5W, PG-5WS, PG-9 or PG-C.
TEMPLE-INLAND FOREST PRODUCTS CORP - Type TG-C.
SIAM GYPSUM INDUSTRY (SARABURI) CO LTD - Type EX-1.
STANDARD GYPSUM L L C - Types SGC, SG-C or SGC-G.
UNITED STATES GYPSUM CO - Types AR, C, FRX-G, IP-AR, IP-X1, IP-X2, IPC-AR, SCX, SHX, WRC, WRX.
USG MEXICO S A DE C V - Types AR, C, IP-AR, IP-X1, IP-X2, IPC-AR, SCX, SHX, WRC, WRX.
4A. **Gypsum Board*** - (As an alternate to Item 4) - Nom. 3/4 in. thick , installed as described in Item 4.
CANADIAN GYPSUM COMPANY - Types AR, IP-AR.
UNITED STATES GYPSUM CO - Types AR, IP-AR.
USG MEXICO S A DEV C V - Types AR, IP-AR.
4B. **Gypsum Board*** - (As an alternate to Items 4 and 4A) - 5/8 in. thick , 2 ft. wide, tongue and groove edge, applied horizontally as the outer layer to one side of the assembly. Secured as described in Item 4. Joint covering (Item 2) not required.
CANADIAN GYPSUM COMPANY - Types SHX.
UNITED STATES GYPSUM CO - Types SHX.
USG MEXICO S A DEV C V - Types SHX.
5. **Molded Plastic*** - Not shown, Optional - Solid vinyl siding mechanically secured over the outer layer to framing members in accordance with manufacturer's recommended installation details.
ASSOCIATED MATERIALS INC
ALSIDE, DIV OF
GENTEK BUILDING PRODUCTS LTD
HEARTLAND BUILDING PRODUCTS INC
VYTEC CORP
NEBRASKA PLASTICS INC
6. **Steel Framing Members** - (Optional, Not shown)* - Furring channels and resilient sound isolation clip as described below:
A. **Furring Channels** - Formed of No. 25 MSG galv. steel. 2-3/8 in. wide by 7/8 in. deep, spaced 24 in. o.c. perpendicular to studs. Channels secured to studs as described in Item B. Ends of adjoining channels are overlapped 6 in. and tied together with double strand of No. 18 SWG galv. steel wire near each end of overlap. As an alternate, ends of adjoining channels may be overlapped 6 in. and secured together with two self-tapping #6 framing screws, min. 7/16 in. long at the midpoint of the overlap, with one screw on each flange of the channel. Wallboard attached to furring channels as described in Item 4.
B. **Steel Framing Members*** - Resilient sound isolation clip used to attach furring channels (Item 6A) to studs. Clips spaced 48 in. o.c. and secured to studs with No. 8 x 2-1/2 in. coarse drywall screw through the center grommet. Furring channels are friction fitted into clips.
PAC INTERNATIONAL INC - Type RSIC-1.

*Bearing the UL Classification Mark

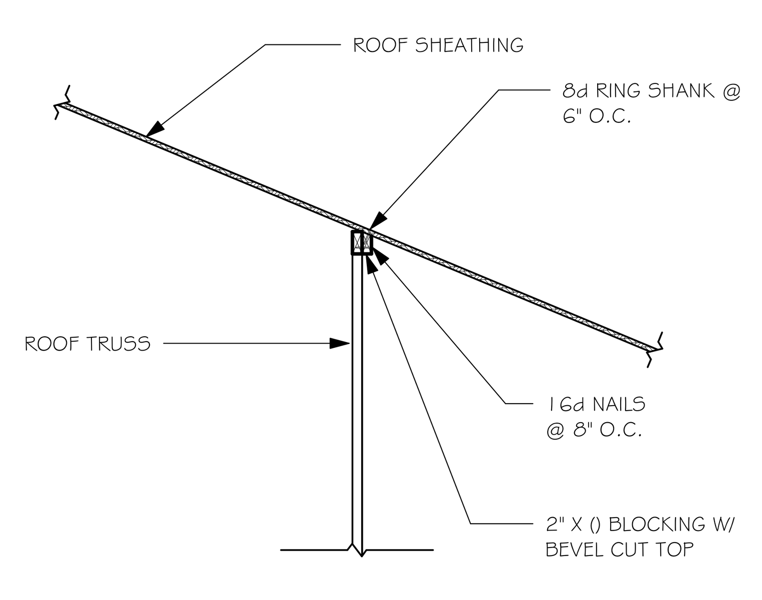

BEVELED BLOCKING DETAIL

TRUSS BEARING CONDITIONS AND STRAPPING BASED ON TRUSS LAYOUT PREPARED BY BUILDERS FIRST SOURCE JOB# DATED: 01/4/19 REVISED: 02/22/19 (1)

BEARING HEIGHT

= BEARING @ 9'-4"

= FULL HEIGHT WALL PER 6/S-2

PLAN NOTES:

1. ROOF AND FLOOR TRUSS BEARING ELEVATION VARIES, SEE LEGEND.
2. ROOF AND FLOOR FRAMING SHALL BE WOOD TRUSSES DESIGNED BYA DELEGATED TRUSS ENGINEER PER DESIGN CRITERIA ON SHEET S-1.
3. PROVIDE STRAPPING AT TRUSSES PER NOTES ON THIS SHEET.
4. FOR NAILING OF ROOF AND FLOOR DECK, SEE 1 AND 2 ON S-1.
5. 8F8-1B etc., DENOTES PRECAST LINTEL ABOVE DOOR/WINDOW OPENING PER SCHEDULE THIS SHEET.
6. AT TRUSS BEARING, PROVIDE 8x8 MASONRY BOND BEAM W/ 1 #5 CONTINUOUS, SEE DETAIL 11/S-1.

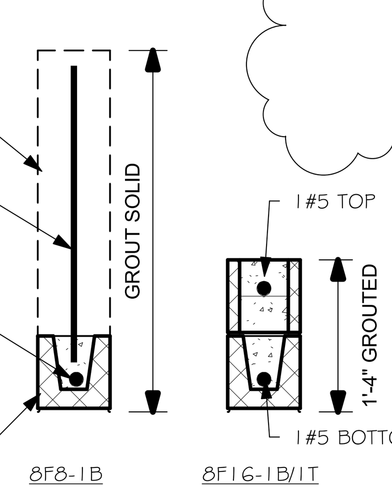

PRECAST LINTEL SCHEDULE

AT SWING DOORS, USE 2" RECESS STYLE LINTEL IF NEEDED FOR ROUGH OPENING.

LINTELS BEAR 4" MIN. EACH END

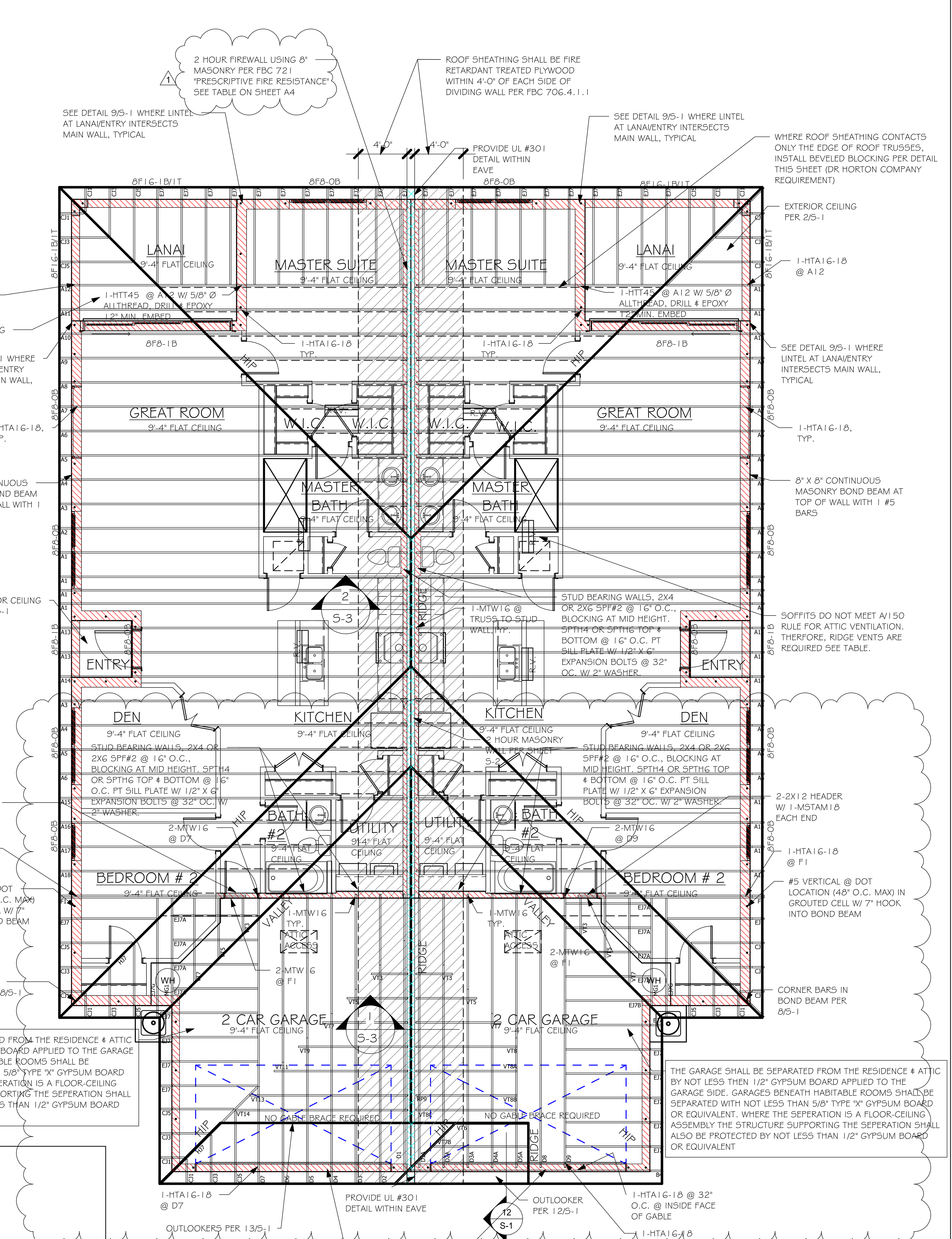

ROOF FRAMING PLAN
3/16" = 1'-0"

No.	Description	Date
1	REVISE DIRECTION OF ROOF TRUSSES AT GARAGE TO AVOID BEARING ON FIREWALL. DEFINE 2 HOUR FIREWALL PER FBC721	03/07/19

DESIGN IN ACCORDANCE WITH THE RESIDENTIAL FLORIDA BUILDING CODE 2017 - 6TH EDITION

D·R·HORTON® America's Builder — DHI Listed NYSE

Gulf Coast Drafting & Design, Inc.
EMAIL: PLANS@GULFCOASTDRAFTING.COM
PHONE: 239-540-1822
1515 SE 47TH ST. CAPE CORAL, FL 33904

This signature and seal is for work performed by the Structural Engineer of Record (SER) related to Structural Engineering only. No work was performed by the SER in other disciplines such as architectural, mechanical, plumbing, electrical, fire, life safety, accessibility, energy, site work, civil, or geotechnical.
STRUCTURAL ENGINEERING
STRUCTURAL SYSTEMS OF NORTH FLORIDA
1634 S.E. 47th ST SUITE #3
CAPE CORAL, FL 33904
(239) 549-4554
CA# 8829

LOT: 113-114
SUBDIVISION: WEST VILLAGES TVs
ADDRS: 20911-20917 FETTERBRUSH PL
D.R.H. #: 578950047-048

MODEL
1526 VILLA
GCD JOB # 10708

DATE: 01/16/19
DRAWN BY: JSL
CHECKED BY: JWC
REVISED: (1) 03/07/19
PLAN: ROOF
SCALE: As indicated

A-4

Z:\MASTER\2018 BUILDERS\2018 DR HORTON\SUBDIVISIONS\WEST VILLAGES TV's\10708
LOT 113-114 1526 A\REVIT\10708 1526 A.rvt

ELECTRICAL LEGEND

	ELECTRICAL METER
	ELECTRICAL PANEL
J	120 V JUNCTION BOX
	SINGLE RECEPTACLE OUTLET
	220 V RECEPTACLE OUTLET
	4-PLEX RECEPTACLE OUTLET
	DUPLEX RECEPTACLE OUTLET
	1/2 SWITCHED DUPLEX OUTLET
AFF	DUPLEX RECEPTACLE AT ELEV. A.F.F.
	DUPLEX RECEPTACLE - ABOVE COUNTER
	SINGLE POLE SWITCH
3	3 WAY SWITCH
D	DIMMER SWITCH
MS	MOTION SENSOR SWITCH
SD SCD	AC/DC SMOKE DETECTOR TO BE INTERCONNECTED ANY RESIDENT HAVING A FOSSIL-BURNING HEATER OR APPLIANCE, A FIREPLACE, OR AN ATTACHED GARAGE SHALL HAVE AN OPERATIONAL CARBON MONOXIDE ALARM INSTALLED WITHIN 10 FEET OF EACH ROOM USED FOR SLEEPING PERPOSES. PER RULE 9B-3.04.72 SD (SMOKE DETECTOR) SCD (CARBON MONOXIDE/ SMOKE DETECTOR)
T	TELEPHONE OUTLET
TV	TELEVISION RECEPTION OUTLET
	SURFACE MOUNTED CEILING LIGHT
	RECESSED LIGHT
	WALL MTD. BRACKET LIGHT
	DUPLEX FLOOD LIGHT
	EXHAUST FAN
	TRACK MTD. LIGHTS
	A/C DISCONNECT
	PUSH BUTTON (PB) / DOOR BELL (DB)
IC	INTERCOM
	KEYPAD
	4' FLUORESCENT LIGHT
	2' UNDER COUNTER LIGHT

NOTE: NOT ALL SYMBOLS ARE USED FOR THIS PROJECT.

ELECTRICAL NOTES:

ARC-FAULT CIRCUIT-INTERRUPTERS AND TAMPER RESISTANT RECEPTACLES SHALL BE INSTALLED IN DWELLING UNITS PER N.E.C 210.12 AND 406.11

ALL ELECTRICAL EQUIPMENT TO BE SET AT OR ABOVE BASE FLOOD ELEVATION.

ALL OUTLETS IN WET AREAS AND ALL EXTERIOR OUTLETS TO BE GFIS.

INSTALL PHONE AND T.V PER CONTRACT.

INSTALL ALL ELECTRICAL PER NEC 2014

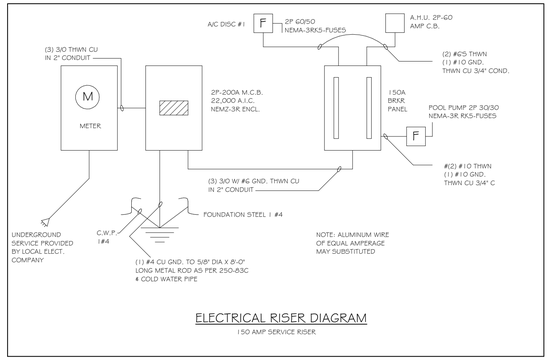

ELECTRICAL RISER DIAGRAM

150 AMP SERVICE RISER

AIR CONDITIONING COORDINATION REQUIRED.
PRIOR TO ORDERING ROOF TRUSSES, THE CONTRACTOR SHALL WORK WITH THE AIR CONDITIONING SUB CONTRACTOR TO DESIGN/PLAN AND LAYOUT THE LOCATION OF AIR HANDLING EQUIPMENT, AIR DUCT SIZE AND LOCATION AND COORDINATE THAT DESIGN WITH THE TRUSSES FOR SPACE, CONNECTIVITY, AND POSITION REQUIREMENTS.
THE CONTRACTOR MUST ADVISE THE TRUSS COMPANY PRIOR TO ANY CONSTRUCTION OF TRUSSES OF THE AIR CONDITIONING/HANDLING EQUIPMENTS SIZES AND WEIGHT AND DUCT LAYOUT CONCERNS OR REQUIREMENTS THAT MAY HAVE THE POTENTIAL TO CHANGE OR MODIFY THE TRUSSES TO ACCOMODATE THE SAME.
THE CONTRACTOR SHALL COORDINATE CONDENSATION DISCHARGE LINE LOCATION, AND ELECTRICAL SERVICE TO AIR EQUIPMENT, AND PROVIDE ANY LOCAL DISCONNECTS, LIGHTS AND SERVICE PLATFORMS THAT MAY BE REQUIRED.

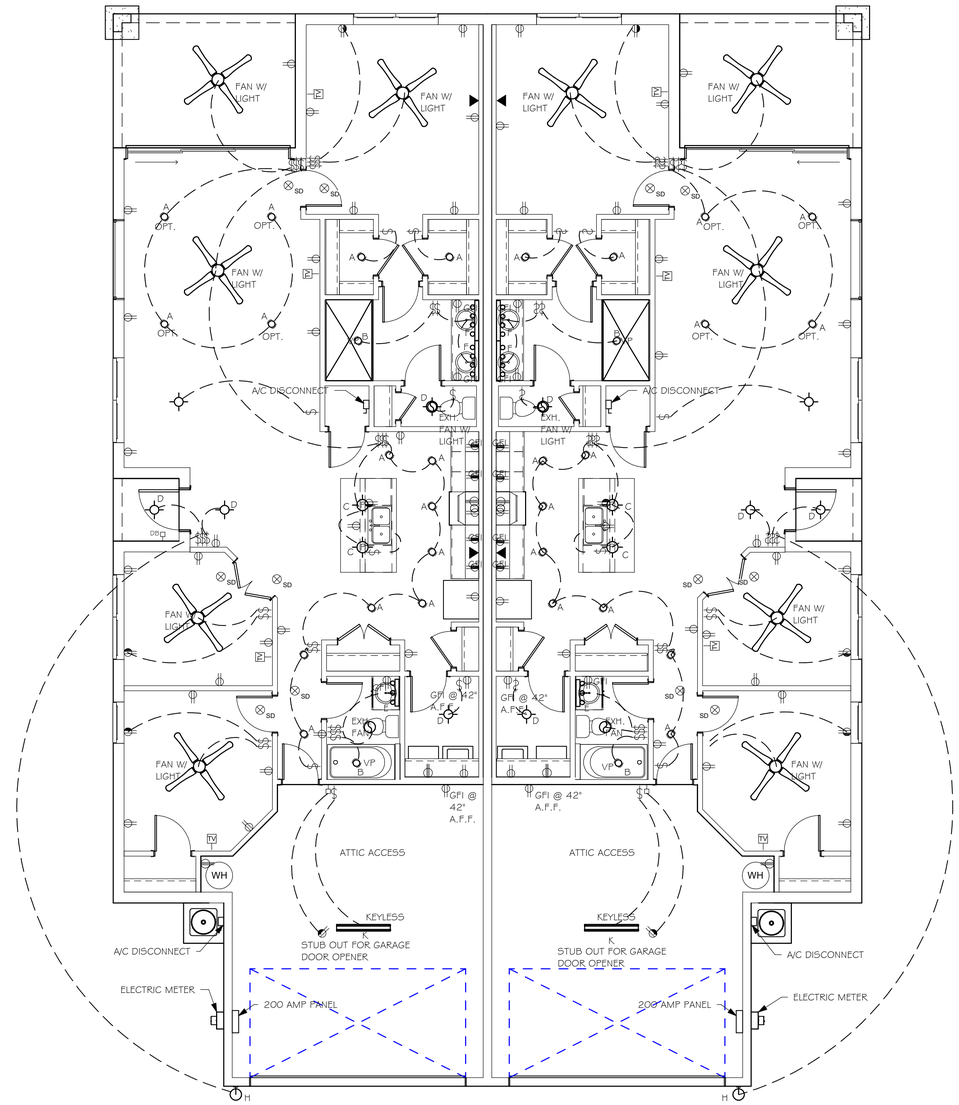

ELECTRICAL PLAN

3/16" = 1'-0"

No.	Description	Date

DESIGN IN ACCORDANCE WITH THE RESIDENTIAL FLORIDA BUILDING CODE 2017 - 6TH EDITION

ELECTRICAL NOTES FOR FIRE RATED WALLS

ELECTRICAL OUTLETS PLACED IN FIRE RATED WALLS SHALL BE IN CONFORMANCE WITH THE UNDERWRITERS LABORATORIES, INC., FIRE RESISTANCE DIRECTORY, CURRENT EDITION. THESE REQUIREMENTS INCLUDE, BUT ARE NOT LIMITED TO, THE FOLLOWING SPECIFIC ITEMS:

A) INDIVIDUAL OUTLET/SWITCH BOXES SHALL OT EXCEED (16) SQUARE INCHES IN AREA.

B) AGGREGATE AREA OF OUTLET/SWITCH BOXES SHALL NOT EXCEED (100) SQUARE INCHES WITHIN (100) SUARE FEET OF WALL AREA.

C) OUTLET/SWITCH BOXES LOCATED ON OPPOSITE SIDE OF THE SAME WALL SHALL BE SEPERATED BY A MINIMUM OF (24) INCHES.

D) ALL OUTLET/SWITCH BOXES SHALL BE SECURELY ATTACHED TO THE STUDS AND THE OPENING IN THE WALL BOARD FACING SHALL BE CUT SO THAT THE CLEARANCE BETWEEN THE BOX AND THE WALLBOARD DOES NOT EXCEED 1/8 INCH.

ELECTRICAL PLAN

200 AMP SERVICE			
TAG	QUANTITY	PRODUCT	
A	(26)	(RECESSED CANS)	
B	(4)	(VAPORS)	
C	(4)	(PENDANT LIGHT	
D	(8)	(10" MUSHROOMS)	
E	(2)	(24" AVALON 3 LT)	
F	(4)	(36" AVALON 4 LT)	
G	(X)	(NOT USED)	
H	(2)	(COACH LIGHTS)	
I	(X)	(COACH LIGHTS)	
J	(1)	(J BOX)	
K	(2)	(4' FLUORESCENT)	
L	(X)	(2' FLUORESCENT)	
M	(X)	(5LT CHANDELIER)	
N	(X)	(3 LT AVALON)	
O	(X)	(PENDANT/ NOOK)	
P	(X)	(X)	
Q	(X)	(X)	

D·R·HORTON® America's Builder
DHI NYSE

Gulf Coast Drafting & Design, Inc.
EMAIL: PLANS@GULFCOASTDRAFTING.COM
PHONE: 239-540-1822
1515 SE 47TH ST. CAPE CORAL, FL 33904

LOT: 113-114
SUBDIVISION: WEST VILLAGES TVs
ADDRS: 20911-20917 FETTERBRUSH PL
D.R.H. #: 578950047-048

MODEL
1526 VILLA
GCD JOB # 10708

DATE: 01/16/19
DRAWN BY: JSL
CHECKED BY: JWC
REVISED:
PLAN: ELECTRICAL
SCALE: As indicated

A-5

Z:\MASTER\2018 BUILDERS\2018 DR HORTON\SUBDIVISION\WEST VILLAGES TV's\10708
LOT 113-114 1526 A\REVIT\10708 1526 A.rvt

1

RESIDENTIAL SPECIFICATIONS

GENERAL NOTES

1. THE CONTRACTOR SHALL VERIFY ALL CONDITIONS AND DIMENSIONS AT THE JOB SITE PRIOR TO COMMENCING WORK. THE CONTRACTOR SHALL REPORT ALL DISCREPENCIES BETWEEN THE DRAWINGS AND EXISTING CONDITIONS TO THE DESIGNER PRIOR TO COMMENCING WORK.

2. THE CONTRACTOR SHALL SUPPLY, LOCATE AND BUILD INTO THE WORK ALL INSERTS, ANCHORS, ANGLES, PLATES, OPENINGS, SLEEVES, HANGERS, SLAB DEPRESSIONS AND PITCHES AS MAY BE REQUIRED TO ATTACH AND ACCOMMODATE OTHER WORK.

3. ALL DETAILS AND SECTIONS SHOWN ON THE DRAWINGS ARE INTENDED TO BE TYPICAL AND SHALL BE CONSTRUCTED TO APPLY TO ANY SIMILAR SITUATION ELSEWHERE IN THE WORK EXCEPT WHERE A DIFFERENT DETAIL IS SHOWN.

4. SUBSURFACE SOIL CONDITION INFORMATION IS NOT AVAILABLE FOUNDATIONS ARE DESIGNED FOR A SOIL BEARING CAPACITY OF 2,000 PSF. THE CONTRACTOR SHALL REPORT ANY DIFFERING CONDITIONS TO THE DESIGNER PRIOR TO COMMENCING WORK.

5. STRUCTURAL DRAWINGS SHALL BE USED IN CONJUCTION WITH JOB SPECIFICATION AND HOUSE PLANS, MECHANICAL, ELECTRICAL, PLUMBING, AND SITE DRAWINGS, CONSULT THESE DRAWINGS FOR SLEEVES, DEPRESSIONS AND OTHER DETAILS NOT SHOWN ON STRUCTURAL DRAWINGS.

6. ALL SPECIFIED FASTENERS MAY ONLY BE SUBSTITUTED IF APPROVED BY THE ENGINEER IN WRITING, THE INSTALLATION OF THE FASTENERS SHALL BE IN ACCORDANCE WITH THE MANUFACTURER'S SPECIFICATIONS. SIMPSON FASTENERS SPECIFIED MAY BE SUBSTITUTED WITH THE SAME QUANTITY AND EQUIVALENT STRENGTH PRODUCT.
ALL BOLTS, NUTS, WASHERS, STRAPS AND FASTENERS INCLUDING NAILS, SHALL BE HOT MOPED DIPPED GALVANIZED OR STAINLESS STEEL CONTINUOUS ANCHORAGE SHALL BE PROVIDED BETWEEN ALL TRUSSES, WALL SECTIONS, BEAMS, POSTS AND FOOTINGS WITH USE OF STRAPS AND CONNECTORS AS SPECIFIED HEREIN.

7. TREATED WOOD REQUIREMENTS:-
ALL TREATED WOOD EXPOSED TO WEATHER SHALL BE PROTECTED, PRESSURE TREATED, OR NATURALLY RESISTANT TO DECAY.
ALL WOOD TOUCHING MASONRY OR CONCRETE SHALL BE ISOLATED, OR PRESSURE TREATED.

8. THE STRUCTURE IS DESIGNED TO BE SELF SUPPORTING AND STABLE AFTER THE BUILDING IS COMPLETE. IT IS THE CONTRACTOR'S SOLE RESPONSIBILTY TO DETERMINE ERECTION PROCEDURES AND SEQUENCES TO ENSURE SAFETY OF THE BUILDING AND ITS COMPONENTS DURING ERECTION. THIS INCLUDES THE NECESSARY SHORING, SHEETING, TEMPORARY BRACING, GUYS, OR TIE DOWNS.

9. CEILING DRYWALL INSTALLED WITHIN THE HOUSE TO TRUSSES SPACED 24" O.C. SHALL BE 5/8" DRYWALL OR 1/2" SAG RESISTANT PER SEC. 702.3.5

10. LANAI CEILINGS & COVERED ENTRY CEILINGS
1X4 STRIPPING @ 16" O.C. FASTENED WITH 2-8d NAILS TO EACH TRUSS. 5/8" EXTERIOR GYP. BOARD CEILING FASTENED WITH 8d NAILS OR 1-5/8" DRYWALL SCREWS @ 6" O.C. EDGE AND FIELD.

3

GENERAL ROOF ASSEMBLY

ROOF SHEATHING
SHALL BE APA RATED SHEATHING, EXPOSURE 1, SPAN RATING 24/16 OR BETTER. INSTALL PANELS WITH LONG DIMENSION PLACED PERPENDICULAR TO TRUSSES. A 1/8" SPACE BETWEEN ADJACENT SHEETS SHALL BE MAINTAINED . INSTALL "H" CLIPS AT UNSUPPORTED PANEL EDGES. THE ROOF SHEATHING SHALL BE NAILED WITH 8d RING SHANK NAILS @ 4" O.C. EDGE AND 6" O.C. FIELD. ENSURE THAT ALL NAILS PENETRATE THE TOP CHORD OF THE TRUSSES WITHOUT SPLITTING. RING SHANK NAILS PER R803.2.3.1 - 0.113" NOMINAL SHANK DIAMETER, RING DIAMETER OF 0.012" OVER SHANK DIAMETER, 16 TO 20 RINGS PER INCH, 0.280" DIAMETER FULL ROUND HEAD, 2" NAIL LENGTH.

FLASHING
FLASHING SHALL BE ALUMINUM, ALUMINUM ZINC COATED STEEL 0.0179" THICK, 26 GAUGE AZ50 ALUM ZINC, OR GALVANIZED STEEL 0.0179" THICK, 26 GAUGE ZINC COATED G90. FLASHING SHALL BE INSTALLED IN ACCORDANCE WITH THE ZIP SYSTEM ROOF SHEATHING MANUFACTURES PUBLISHED REQUIREMENTS. ALL FLASHING AND INSTALLATION SHALL CONFORM TO SECTION R905.2.8 (1 TO 5).

DRIP EDGE
DRIP EDGE SHALL BE PROVIDED AT ALL EAVES AND GABLES OF SHINGLES ROOFS, LAPPED A MINIMUM OF 3" @ JOINTS. THE OUTSIDE EDGE SHALL EXTEND A MINIMUM OF 1/2" BELOW SHEATHING AND THE INSIDE EDGE SHALL EXTEND BACK A MINMUM OF 2". DRIP EDGE SHALL BE FASTENED AT NO MORE THAN 4" CENTERS. THERE SHALL BE A MINIMUM OF 4" WIDTH OF ROOF CEMENT INSTALLED OVER THE DRIP EDGE FLANGE.

6

ASPHALT SHINGLE ROOF SPEC'S

SHINGLES
15# FELT SHALL BE INSTALLED UNDER ASPHALT SHINGLES. ALL ASPHALT SHINGLES SHALL HAVE SELD-SEALING STRIPS OR BE INTERLOCKING AND COMPLY WITH ASTM D 225 OR D 3462, AND SHALL BE SECURED TO THE ROOF WITH NO LESS THAN 6 FASTENERS PER SHINGLE STRIP, OR A MINIMUM OF 2 FASTENERS PER SHNGLE TAB, AND SHALL IN NO CASSE BE FASTENED WITH LESS FASTENERS THAN THAT REQUIRED BY THE MANUFACTURE. INSTALLATION SHALL COMPLY WITH MANUFACTURES REQUIREMENTS FOR INSTALLATION IN THE GIVEN FLORIDA WIND ZONE, AS DETERMINED BY ASTM D 3161.

FASTENERS
FASTENERS FOR ASPHALT SHINGLES SHALL COMPLY WITH ASTM F 1667, AND SHALL BE MADE WITH GALVANIZED STEEL, STAINLESS STEEL OR ALUMINUM WITH A MINIMUM SHANK SIZE OF 12 GAUGE (0.105") WITH A MINIMUM 3/8" DIAMETER HEAD SHANK AND SHALL BE A LENGTH TO PENTRATE THE SHEATHING

THE NAIL COMPONENT OF PLASTIC CAP NAILS SHALL MEET OR EXCEED THE REQUIREMENTS OF ASTM A 641, CLASS 1, OR EQUAL, AND SHALL BE CORROSION RESTITANT BY ELECTRO GALVANIZATION, MECHANICAL GALVANIZATION, HOT DIPPED GALVANIZATION OR SHALL BE MADE OF STAINLESS STEEL, NON-FERROUS METAL

4

CLAY AND CONCRETE ROOF TILE SPECS

INSTALL PEEL AND STICK UNDERLAYMENT APPROVED FOR SINGLE LAYER APPLICATION UNDER TILE ROOF.
THE INSTALLATION OF CLAY AND CONCRETE TILE SHALL COMPLY WITH THE PROVISIONS OF R905.3 F.B.C.
MARKING: EACH ROOF TILE SHALL HAVE A PERMANENT MANUFACTURER'S IDENTIFICATION MARK.
APPLICATION SPECIFICATIONS: THE TILE MANUFACTURER'S WRITTEN APPLICATION SPECIFICATIONS SHALL BE AVAILABLE AND SHALL INCLUDED BUT NOT BE LIMITED TO THE FOLLLOWING:
1. TILE PLACEMENT AND SPACING,
2. ATTACHMENT SYSTEM NECESSARY TO COMPLY WITH CURRENT WIND CODE,
   A. AMOUNT AND PLACEMENT OF MORTART
   B. AMOUNT AND PLACEMENT OF ADHESIVE
   C. TYPE, NUMBER, SIZE AND LENGTH OF FASTENERS AND CLIPS.
3. UNDERLAYMENT
4. SLOPE REQUIREMENT.

5

FLOOR SHEATHNG AT 2ND FLOOR

A.P.A. RATED STURDI-FLOOR, EXPOSURE 1, TONGUE & GROOVE EDGES SPAN RATING 48/24 OR BETTER, GLUED AND NAILED

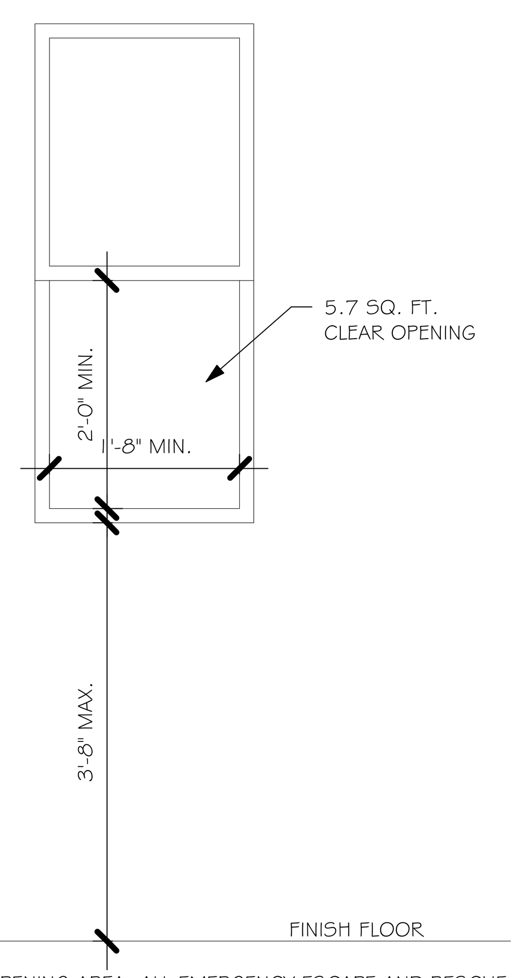

R310.2.1 MINMUM OPENING AREA- ALL EMERGENCY ESCAPE AND RESCUE OPENINGS SHALL HAVE A MINIMUM NET CLEAR OPENING OF 5.7 SQUARE FEET (0.530 m²).

EXCEPTION- GRADE FLOOR OPENINGS SHALL HAVE A MINIMUM NET CLEAR OPENING OF 5 SQUARE FEET (0.465 m²).

R310.2.1 MINMUM OPENING HEIGHT- THE MINIMUM NET CLEAR OPENING HEIGHT SHALL BE 24 INCHES (610mm).

R310.2.1 MINMUM OPENING WIDTH- THE MINIMUM NET CLEAR OPENING WIDTH SHALL BE 20 INCHES (508mm).

R310.1.1 OPERATIONAL CONSTRAINTS- EMERGENCY ESCAPE AND RESCUE OPENINGS SHALL BE OPERATIONAL FROM THE INSIDE OF THE ROOM WITHOUT THE USE OF KEYS OR TOOLS.

R310.2.3 WINDOW WELLS- THE MINIMUM HORIZONTAL AREA OF THE WINDOW WELL SHALL BE 9 SQUARE FEET (0.84 m²), WITH A MINIMUM HORIZONTAL PROJECTION AND WIDTH OF 36 INCHES (914mm). THE AREA OF THE WINDOW WELL SHALL ALLOW THE EMERGENCY ESCAPE AND RESCUE OPENING TO BE FULLY OPENED.

MINIMUM EGRESS WINDOW DETAIL

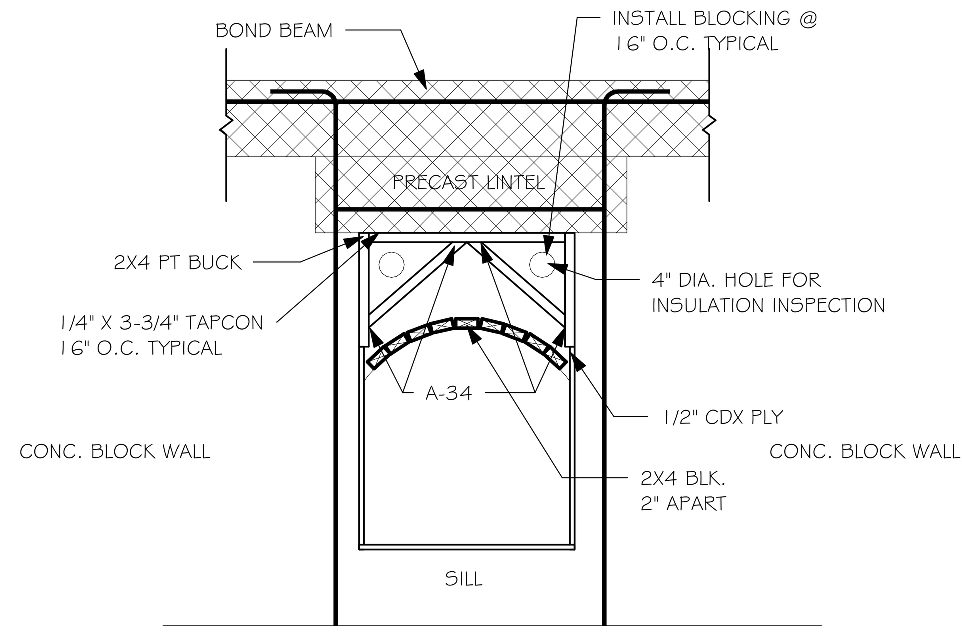

WINDOW OR DOOR ARCH
SPACE FRAMING ABOVE

SPECIAL NOTE:

FRAMING OF DECORATIVE ARCHES AT WINDOW AND DOOR OPENINGS SHALL COMPLY WITH THE FOLLOWING:

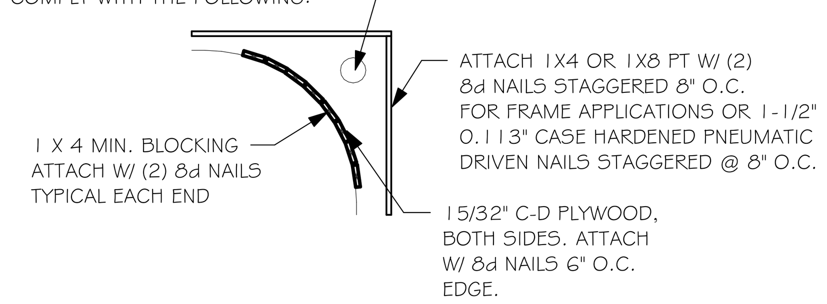

FILL IN FRAMING

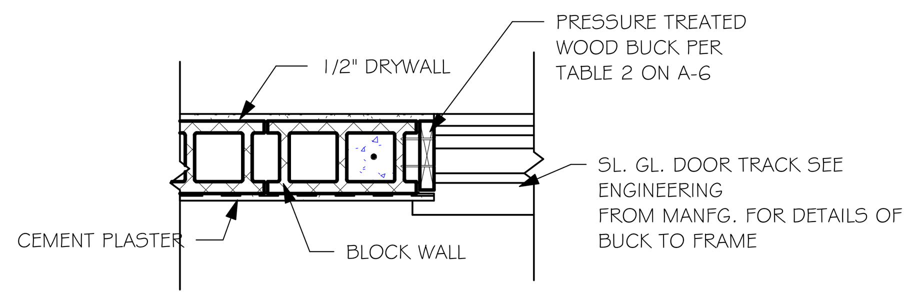

SL. GL. DR. JAM TO BLOCK DETAIL
3/4" = 1'-0"

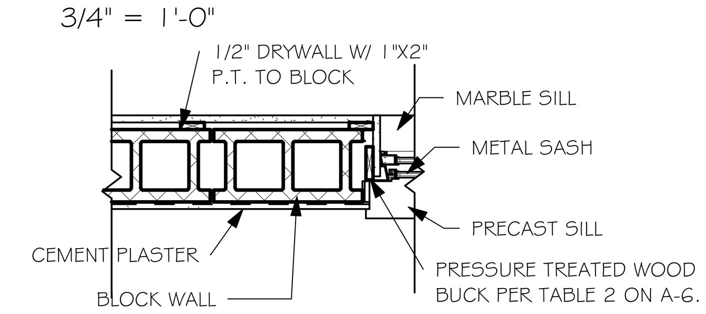

WINDOW JAM TO BLOCK DETAIL
3/4" = 1'-0"

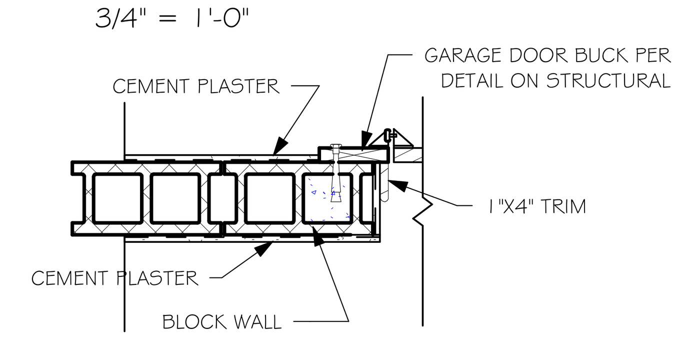

GARAGE DOOR JAM DETAIL
3/4" = 1'-0"

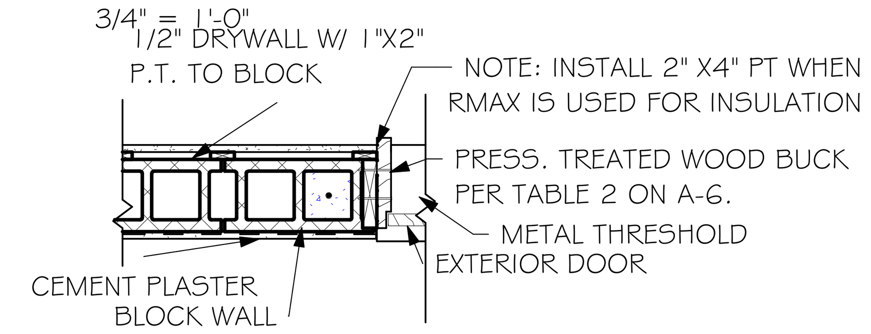

DOOR JAM TO BLOCK DETAIL
3/4" = 1'-0"

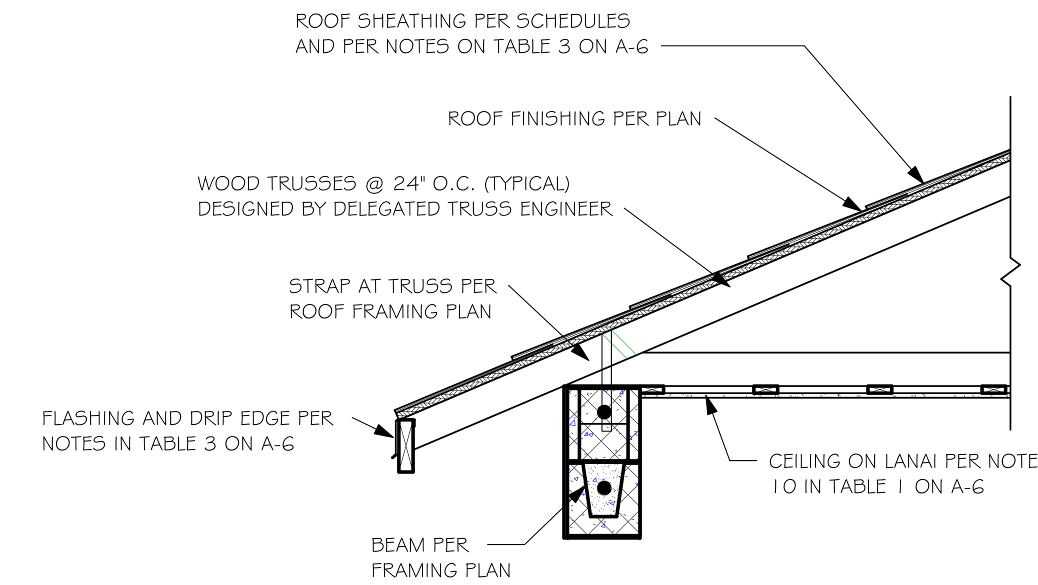

LANAI/ ENTRY ROOF ASSEMBLY
3/4" = 1'-0"

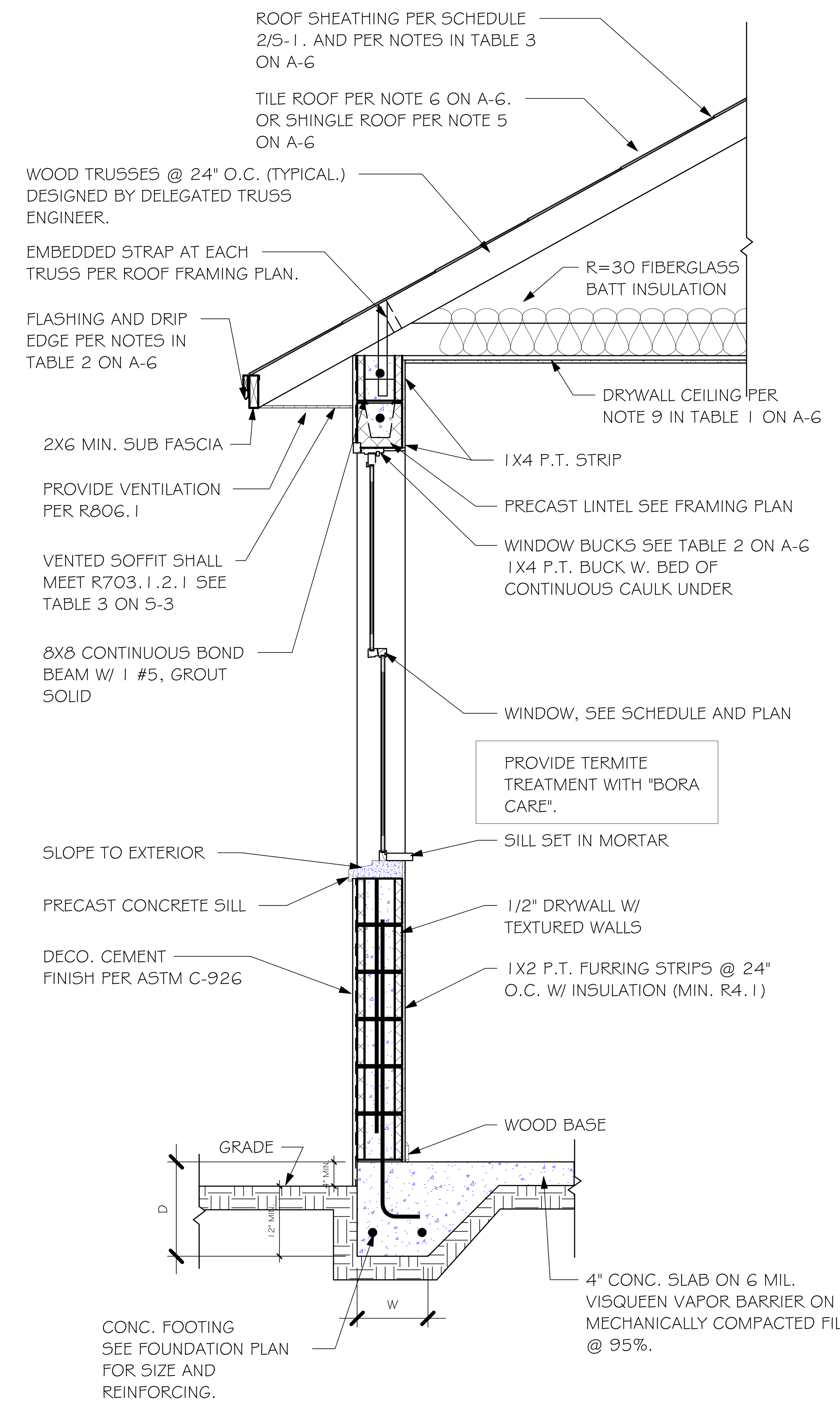

TYPICAL WALL SECTION

No.	Description	Date

DESIGN IN ACCORDANCE WITH THE RESIDENTIAL FLORIDA BUILDING CODE 2017 - 6TH EDITION

D·R·HORTON® America's Builder DHI Listed NYSE

Gulf Coast Drafting & Design, Inc.
EMAIL: PLANS@GULFCOASTDRAFTING.COM
PHONE: 239-540-1822
1515 SE 47TH ST. CAPE CORAL, FL 33904

This signature and seal is for work performed by the Structural Engineer of Record (SER) related to Structural Engineering only. No work was performed by the SER in other disciplines such as architectural, mechanical, plumbing, electrical, fire, life safety, accessibility, energy, site work, civil, or geotechnical.
STRUCTURAL ENGINEERING
STRUCTURAL SYSTEMS OF NORTH FLORIDA
1634 S.E. 47th ST SUITE #3
CAPE CORAL, FL 33904
(239) 549-4554
CA# 8829

LOT: 113-114
SUBDIVISION: WEST VILLAGES TVs
ADDRS: 20911-20917 FETTERBRUSH PL
D.R.H. #: 578950047-048

MODEL
1526 VILLA
GCD JOB # 10708

DATE: 01/16/19
DRAWN BY: JSL
CHECKED BY: JWC
REVISED:
PLAN: SECTIONS
SCALE: As indicated

A-6

Z:\MASTER\2018 BUILDERS\2018 DR HORTON\SUBDIVISIONS\WEST VILLAGES TV's\10708
LOT 113-114 1526 A\REVIT\10708 1526 A.rvt

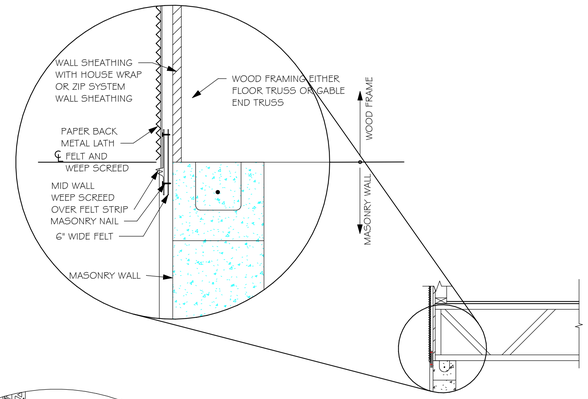

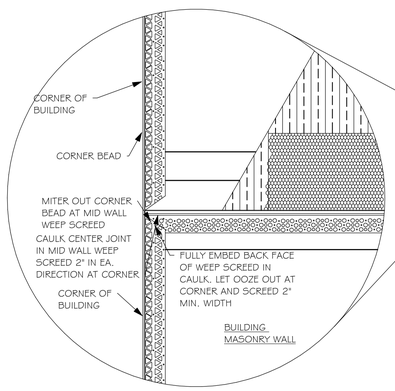

MID WALL WEEP SCREED DETAIL

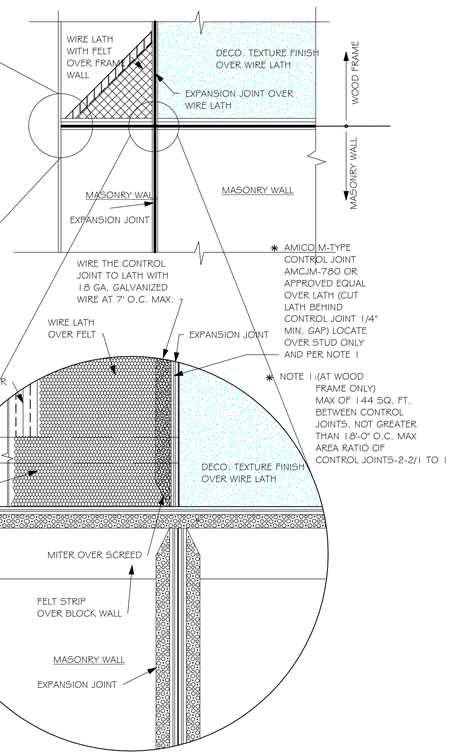

WEEP SCREED DETAIL

INSTALL AT ALL EXTERIOR WALL LOCATIONS WHERE WOOD STUD FRAMING IS ABOVE MASONRY WALLS.

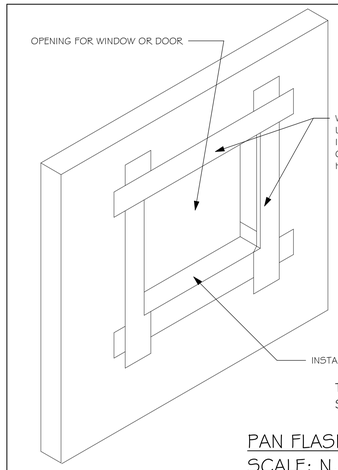

R703.4 - WHERE FLASHING INSTRUCTIONS OR DETAILS ARE NOT PROVIDED BY THE WINDOW OR DOOR MANUFACTURER OR BY THE FLASHING MANUFACTURER, "PAN FLASHING" AHLL BE INSTALLED AT THE SILL OF EXTERIOR WINDOW AND DOOR OPENINGS. PAN FLASHING SHALL BE SEALED OR SLOPED IN SUCH A MANNER AS TO DIRECT WATER TO THE SURFACE OF THE EXTERIOR WALL FINISH OR TO THE WATER-RESISTIVE BARRIER FOR SUBSEQUENT DRAINAGE. OPENINGS USING PAN FLASHING SHALL ALSO INCORPORATE FLASHING OF PROTECTION AT THE HEAD AND SIDES.

"PAN FLASHING" IS A GENERIC TERM THAT USED TO REFER TO "METAL PAN FLASHING". HOWEVER MANY MODERN MATERIALS HAVE BEEN DEVELOPED FOR THE SAME FUNCTION SUCH AS:
- FLEXIBLE PEEL AND STICK FLASHING MEMBRANE
-FLUID APPLIED FLASHING
FOR SUCH PRODUCTS FOLLOW THE MANUFACTURER'S INSTALLATION REQUIREMENTS

FOR IN-DEPTH FLASHING INSTRUCTIONS, REFER TO THE FOLLOWING PUBLICATIONS:
FMA/AAMA 100
FMA/AAMA 200
FMA/WDMA 250
FMA/AAMA/WDMA 300

THE FLASHING INSTRUCTIONS FROM THE WINDOW/ DOOR MFR., OR THE FLASHING MFR., SHALL SUPERCEDE THIS DETAIL

PAN FLASHING PER R703.4
SCALE: N.T.S.

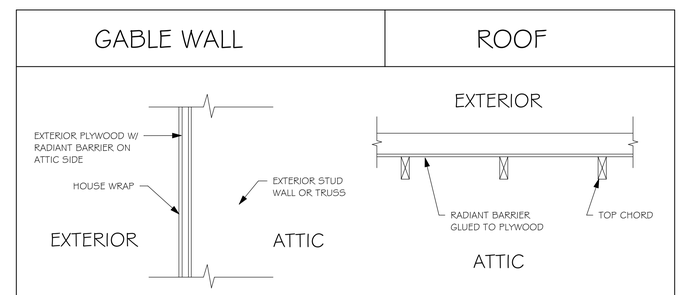

RADIANT BARRIER: SCALE: N.T.S.

NOTE: EXTERIOR WALLS ADJACENT TO ATTIC SPACE, INCLUDING KNEEWALLS AND GABLE END WALLS, MUST HAVE RADIANT BARRIER AND HOUSE WRAP.

No.	Description	Date

DESIGN IN ACCORDANCE WITH THE RESIDENTIAL FLORIDA BUILDING CODE 2017 - 6TH EDITION

D·R·HORTON® America's Builder
Gulf Coast Drafting & Design, Inc.
EMAIL: PLANS@GULFCOASTDRAFTING.COM
PHONE: 239-540-1822
1515 SE 47TH ST. CAPE CORAL, FL 33904

LOT: 113-114
SUBDIVISION: WEST VILLAGES TVs
ADDRS: 20911-20917 FETTERBRUSH PL
D.R.H. #: 578950047-048

MODEL
1526 VILLA

GCD JOB # 10708

DATE: 01/16/19
DRAWN BY: JSL
CHECKED BY: JWC
REVISED:
PLAN: BANDING DETAILS
SCALE: As indicated

A-7

Z:\MASTER\2018 BUILDERS\2018 DR HORTON\SUBDIVISION\WEST VILLAGES TV's\10708
LOT 113-114 1526 A.REVIT\10708 1526 A.rvt

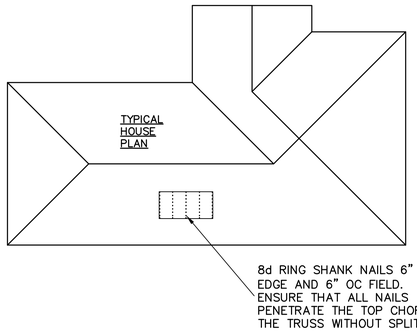

1 ROOF DECK NAILING PATTERN

SCALE: NTS

SHEATHING SCHEDULE

EXTERIOR STUD WALL	FLOOR
7/16" ZIP SYSTEM WALL SHEATHING BY HUBER ENGINEERED WOODS LLC, NAILED W/ 8d COMMON WIRE @ 6" O.C. EDGE AND 6" O.C. FIELD. PROVIDE 2x4 BLOCKING AT ALL JOINTS. INSTALL SHEATHING AND SEAM TAPE IN STRICT ACCORDANCE WITH MFR. WRITTEN INSTRUCTIONS.	N/A
ROOF	**EXTERIOR CEILING AND SOFFIT**
A.P.A. RATED SHEATHING, EXPOSURE 1, SPAN RATING 24/16 OR BETTER. FASTEN WITH 8d RING SHANK NAILS @ 6" O.C. EDGE AND 6" O.C. FIELD. (WHEN 1/2" ZIP BRAND ROOF SHEATHING IS USED, H-CLIPS ARE NOT REQUIRED) (RING SHANK NAILS PER R803.2.3.1: 0.113" NOMINAL SHANK DIAMETER, RING DIA. OF 0.012" OVER SHANK DIAMETER, 16 TO 20 RINGS PER INCH, 0.280" DIAMETER FULL ROUND HEAD, 2" NAIL LENGTH)	OPTIONS: 1) 1x4 STRIPPING @ 16"OC w/ 2-8d NAILS TO EACH TRUSS, 5/8" EXTERIOR GYPBOARD CEILING, FASTEN w/8d NAILS OR 1 5/8" DRYWALL SCREWS @ 6"OC EDGE & FIELD. 2) 3/8" BC PLYWOOD NAILED w/ 6d COMMON @ 6" OC EDGE & FIELD. 3) VINYL OR ALUMINUM PERFORATED SOFFIT INSTALLED PER MANUFACTURER INSTRUCTIONS TO MEET WIND PRESSURES PER R703.1.2.1.

NOTE: EXTERIOR CEILINGS AND SOFFITS 1) AND 2) SPECIFIED HERE MEET THE DESIGN WIND PRESSURES PER R703.1.2.1.

2

WINDOW/DOOR/SOFFIT DESIGN WIND PRESSURES

WIND PRESSURES PER ASCE7-10, 160 MPH, EXPOSURE C, AND CONVERTED TO ALLOWABLE STRESS DESIGN PRESSURES USING 0.6W LOAD FACTOR. (Vasd=124 MPH, RISK CAT II, ENCLOSED, kd=0.85, h=15')

TYPE	INTERIOR ZONE 4	END ZONE 5
SOFFIT	+33.5 -36.3	+33.5 -44.8
TYPICAL WINDOWS & DOORS	+33.5 -36.3	+33.5 -44.8
8' OR 9' GARAGE DOORS	+29.4 -33.3	
16' OR 18' GARAGE DOORS	+28.2 -31.5	

(SEE PLAN FOR OTHER SPECIFIC PRESSURES)

1) TABLE MAY BE USED FOR ANY SIZE WINDOW OR DOOR IN EACH TYPE.
2) USE "INTERIOR ZONE 4" PRESSURES UNLESS WINDOW OR DOOR IS LOCATED WITHIN THE "END ZONE 5" (SEE DIAGRAM BELOW), THEN USE THE HIGHER PRESSURES UNDER THE "END ZONE 5" COLUMN.
3) ALL GLASS / GLAZING SHALL BE IMPACT RATED OR USE IMPACT RATED SHUTTERS.
4) SUBMIT PRODUCT APPROVALS TO THE BUILDING DEPARTMENT AS REQUIRED BY THE LOCAL JURISDICTION.
5) MANUFACTURED SOFFIT PRODUCTS SHALL BE INSTALLED PER MFR ENGINEERING SPEC SHEETS.

* ON IRREGULAR SHAPED BUILDINGS, THERE IS NO GUIDANCE IN THE CODE FOR HOW FAR A CORNER MUST PROTRUDE FROM THE MAIN BUILDING TO BE CONSIDERED 'ZONE 5'. WE HAVE CHOSEN >15'. THIS IS SUBJECT TO JUDGEMENT CALL BY THE AUTHORITY HAVING JURISDICTION.

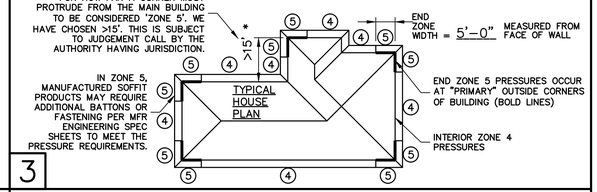

3

DESIGN CRITERIA:

DESIGN IN ACCORDANCE WITH REQUIREMENTS OF THE FLORIDA BUILDING CODE 6TH EDITION (2017) RESIDENTIAL

1. FLOOR & ROOF UNIFORM LOADS:
   ELEVATED FLOORS: LIVE LOAD 40 PSF, DEAD LOAD 20 PSF
   ROOF: LIVE TOP CHORD 20 PSF
   LIVE BOTTOM CHORD 10 PSF (NON-CONCURRENT w/ TCLL)
   CEMENT ROOF TILE DEAD LOAD 25 PSF TOTAL
   SHINGLE/METAL ROOFING DEAD LOAD 15 PSF TOTAL
   MINIMUM DEAD LOAD FOR WIND: TC 5 PSF, BC 5 PSF
   DEFLECTION CRITERIA:
   FLOOR L/480 LIVE, L/360 TOTAL
   ROOF L/240 LIVE, L/180 TOTAL

2. WIND LOADS:
   WIND DESIGN PER ASCE7-10
   BASIC WIND SPEED (ASCE7-10) 160 MPH
   NOMINAL WIND SPEED (Vasd TABLE R301.2.1.3) 124 MPH
   BUILDING CATEGORY II
   IMPORTANCE FACTOR 1.00
   EXPOSURE C
   MEAN ROOF HEIGHT = 15 FT
   ROOF PITCH 5/12
   ENCLOSURE CLASS. ENCLOSED
   INTERNAL PRES. COEFF. +/- 0.18
   WINDOW/DOOR DESIGN WIND PRESSURE, SEE TABLE IN DETAIL 3.
   SOFFITS - PER R703.1.2.1, ALL SOFFITS SHALL BE CAPABLE OF RESISTING THE DESIGN PRESSURES SPECIFIED IN TABLE R301.2(2) FOR WALLS.

3. REINFORCED CONCRETE:
   DESIGN AS PER ACI 318-14
   REQUIRED COMPRESSIVE STRENGTH AT 28 DAYS:
   SLAB ON GRADE f'c = 2500 PSI
   3 1/2" MINIMUM THICKNESS REINFORCED WITH 6x6 w1.4xw1.4 WWF OR FIBERMESH.
   CONVENTIONAL SHALLOW FOOTINGS f'c = 2500 PSI
   BEAMS AND COLUMNS f'c = 3000 PSI
   ALL OTHER CONCRETE (U.N.O.) f'c = 3000 PSI
   UNLESS OTHERWISE SHOWN ON DRAWINGS, MINIMUM CONCRETE COVER FOR REINFORCING SHALL BE AS FOLLOWS:
   FOOTINGS 3"
   SLAB ON GRADE CENTERED
   BEAMS 1 1/2"
   COLUMNS 1 1/2"
   ALL REINFORCING STEEL SHALL BE PLACED IN ACCORDANCE WITH THE TYPICAL BENDING DIAGRAMS AND PLACING DETAILS OF ACI STANDARDS AND SPECIFICATIONS. ALL REINFORCING STEEL SHALL BE HELD SECURELY IN POSITION WITH STANDARD ACCESSORIES DURING PLACING OF CONCRETE.
   REINFORCING STEEL - ASTM A615 GRADE 40 FOR #3
   GRADE 60 FOR #4 TO #11

   WELDED WIRE FABRIC - ASTM A185

   SPLICES IN REINFORCING, SHALL BE 40 BAR DIAMETERS. NON-CONTACT LAP SPLICES MAY BE USED PROVIDED REINFORCING IS NOT SPACED MORE THAN 5" APART FOR #5 BARS.

   FORMWORK AND SHORING SHALL REMAIN IN PLACE UNTIL CONCRETE HAS REACHED AT LEAST 2/3 OF THE REQUIRED 28 DAY STRENGTH.

4. REINFORCED MASONRY:
   DESIGN PER ACI 530-13
   REQUIRED COMPRESSIVE STRENGTHS:
   MASONRY WALLS f'm = 1500 PSI

   REINFORCING STEEL - ASTM A615 GRADE 60.
   SPLICES IN REINFORCING, SHALL BE 48 BAR DIAMETERS.
   ALL CONCRETE MASONRY UNITS SHALL BE COMPOSED OF ASTM C90, GRADE N-1 HOLLOW CONCRETE MASONRY UNITS WITH TYPE 'S' MORTAR. GROUT ALL CELLS CONTAINING VERTICAL REINFORCEMENT WITH 3000 PSI PEA ROCK CONCRETE GROUT. ALL CELLS BELOW FINISHED GRADE SHALL BE GROUTED SOLID. ALL EXTERIOR WALLS SHALL BE REINFORCED FULL HEIGHT AT DOT LOCATIONS ON PLAN. PROVIDE HORIZONTAL JOINT REINFORCEMENT IN WALLS AT 16" OC VERTICALLY, UNLESS NOTED OTHERWISE. IN ADDITION, INSTALL JOINT REINFORCING IN THE FIRST TWO MORTAR JOINTS ABOVE AND BELOW OPENINGS, EXTENDING AT LEAST 24" BEYOND THE OPENING. LAP JOINT REINFORCING 6" MINIMUM.

5. DELEGATED-ENGINEERED WOOD ROOF & FLOOR TRUSSES:
   ALL WOOD ROOF AND FLOOR TRUSSES SHALL BE DESIGNED BY A DELEGATED TRUSS ENGINEER PER RULE 61G15-31.003 OF THE FLORIDA ADMINISTRATIVE CODE. ALL TRUSSES SHALL HAVE TEMPORARY BRACING PER "COMMENTARY AND RECOMMENDATIONS FOR HANDLING, INSTALLING AND BRACING METAL PLATE CONNECTED WOOD TRUSSES, HIB-91." FOR OTHER BRACING REQUIREMENTS, NOTIFY ENGINEER. PROVIDE PERMANENT BRACING PER TRUSS MFR. SHOP DRAWINGS. IF PERMANENT BRACING IS NOT SPECIFIED, CONTACT ENGINEER.

6. FOUNDATION:
   CONVENTIONAL SHALLOW CONCRETE FOOTINGS
   SOIL BEARING CAPACITY 2000 PSF
   THE CONTRACTOR SHALL BE RESPONSIBLE FOR DETERMINING THE SUITABILITY OF THE SOIL CONDITIONS FOR THE INTENDED STRUCTURE AND ASSUMED SOIL BEARING CAPACITY.
   IT IS RECOMMENDED THAT A GEOTECHNICAL FIRM BE HIRED TO PERFORM A SITE EVALUATION.

7. DIMENSIONS: VERIFY ALL DIMENSIONS WITH HOUSE PLANS. SEE HOUSE PLANS, MECHANICAL, ELECTRICAL AND PLUMBING DRAWINGS FOR EMBEDS, OPENINGS, SLEEVES, ETC. WHICH ARE NOT SHOWN ON STRUCTURAL DRAWINGS.

8. MEANS AND METHODS: THE STRUCTURAL ENGINEER SHALL NOT HAVE CONTROL OR BE RESPONSIBLE FOR CONSTRUCTION MEANS, METHODS, TECHNIQUES, PROCEDURES, OR SEQUENCES TEMPORARY BRACING, SHORING, GUYING OR OTHER MEANS TO SUPPORT STRUCTURAL ELEMENTS IN PLACE DURING CONSTRUCTION. FOR THE ACTS OR OMISSIONS OF THE CONTRACTOR, OR ANY OTHER PERSONS PERFORMING THE WORK OR FOR THE FAILURE OF ANY OF THEM TO CONSTRUCT THE WORK IN ACCORDANCE WITH THE CONTRACT DOCUMENTS.

9. SHOP DRAWINGS: SHOP DRAWINGS SHALL BE PREPARED AND SUBMITTED TO THE ENGINEER FOR REVIEW FOR ALL STRUCTURAL ELEMENTS UTILIZING PREFABRICATED COMPONENTS. ONE SET OF SIGNED & SEALED TRUSS ENGINEERING SHALL BE DELIVERED TO THE ENGINEER OF RECORD FOR THE STRUCTURE PER FLORIDA ADMINISTRATIVE CODE 61G15-30.005 AND 61G15-31.003.

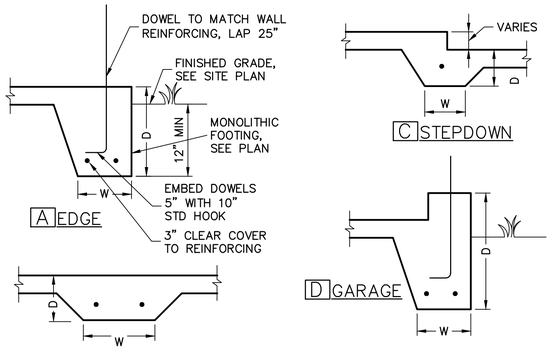

4 MONOLITHIC FOOTINGS

SCALE: 3/4" = 1'-0"

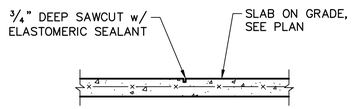

NOTES:
1) PROVIDE SAWCUTS TO CREATE APPROXIMATE 20' X 20' MAXIMUM SQUARES.
2) SAWCUT CONCRETE SLAB WITHIN 4 TO 12 HOURS OF CONCRETE PLACEMENT.

5 SLAB SAWCUT DETAIL

SCALE: NTS

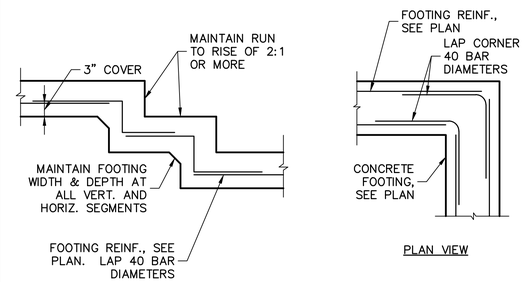

6 STEP FOOTING

SCALE: NTS

FOOTING CORNER BARS

SCALE: NTS

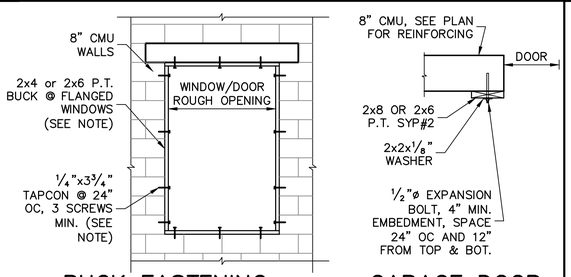

BUCK FASTENING

GARAGE DOOR

NOTE: THIS BUCK FASTENING DETAIL IS INTENDED FOR FLANGED WINDOW/DOOR PRODUCTS THAT FASTEN THRU THE FLANGE WITH WOOD SCREWS TO THE BUCK. FOR WINDOW/DOOR PRODUCTS THAT DO NOT HAVE A FLANGE AND FASTEN INSTEAD OUTWARD THRU THE FRAME, USE MASONRY SCREWS PER MFR. THAT ARE LONG ENOUGH TO PENETRATE 2-1/4" INTO THE MASONRY. IN THIS CASE, THE BUCK MATERIAL IS SIMPLY A SPACER AND MAY BE 1x4 OR 1x6 OR OMITTED ENTIRELY AND THE SPACER MAY BE TACKED IN PLACE WITH MASONRY NAILS OR PINS.

7

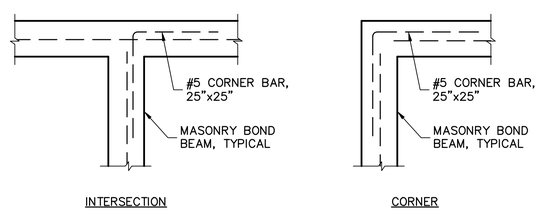

8 CORNER BAR DETAIL IN BOND BEAMS

SCALE: 3/4" = 1'-0"

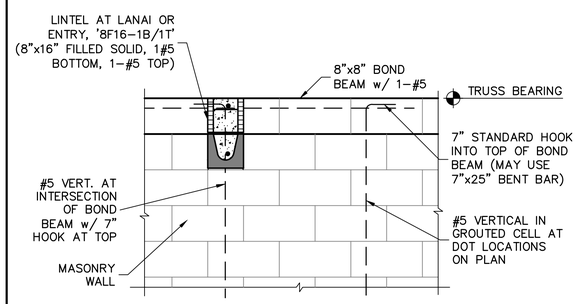

9 BOND BEAM REINFORCING DETAIL

SCALE: 3/4" = 1'-0"

RETROFIT STRAPS TO CONCRETE/MASONRY

TRUSS UPLIFT (LBS) @ 24" OC	CONNECTOR	
TO 1145	1-HTWM16 or 20	8-10dx1 1/2", 4-1/4x2 1/4 CONCRETE SCREW
TO 1145	1-HTWM16 or 20	8-10dx1 1/2", 4-1/4x2 1/4 CONCRETE SCREW
TO 2290	2-HTWM16 or 20	8-10dx1 1/2", 4-1/4x2 1/4 CONCRETE SCREW
TO 4520	2-LUGT2	16-16d, 7-1/4"x2 1/4" CONCRETE SCREW
TO 3610	HTT16	18-10d, 5/8"ø ALLTHREAD, DRILL & EPOXY 10" EMBED w/ USP SET.
TO 9790	HGT-2/3	TWO 3/4"ø ALTHREAD, DRILL & EPOXY 12" EMBED WITH USP SET.

NOTES:
1) WHERE EMBEDDED STRAP IS MISSING OR MIS-LOCATED, PROVIDE A STRAP FROM THE ABOVE LIST AT EACH ROOF TRUSS BEARING POINT, BASED ON THE TRUSS UPLIFT VALUES IN THE SIGNED AND SEALED TRUSS DESIGN PACKAGE.
2) CONNECTORS ARE USP. ALL CONNECTORS SHALL BE INSTALLED IN STRICT ACCORDANCE WITH USP PRINTED INSTRUCTIONS.
3) CONCRETE SCREW SHALL BE WEDGE-BOLT+, TITEN, TAPCON OR EQUIVALENT.

10 RETROFIT UPLIFT CONNECTOR SCHEDULE

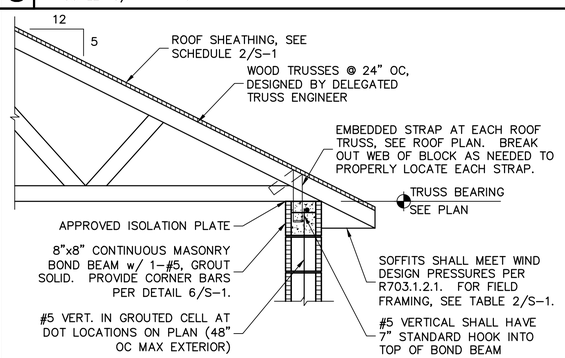

11 TRUSS STRAP TO BOND BEAM

SCALE: 3/4" = 1'-0"

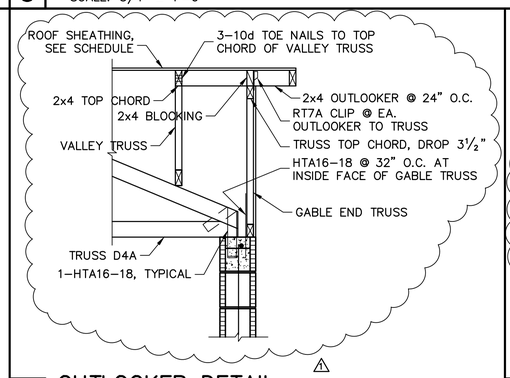

12 OUTLOOKER DETAIL

SCALE: 3/4" = 1'-0"

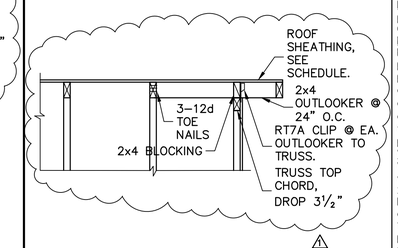

At Exterior Stud Walls and Gable Ends with Wall Sheathing, apply plaster over metal lath over water resistive barrier as follows:
Plaster R703.7.2; 3-coat 7/8" thick portland cement based plaster per ASTM C926.
Metal Lath R703.7.1; Self furring paper backed 2.5lb diamond mesh metal lath per ASTM C847, G60 galvanized, fastened per ASTM C1063 with 1-1/2" long, 11 gage nails with 7/16" head (roofing nails) at 7" oc, or 1-1/2"long, 16 gage staples at 6" oc, into the framing members (ie, the nails or staples must align with and penetrate 3/4" into the framing studs).
Water Resistive Barrier (WRB) R703.7.3; Water-resistive vapor-permeable barrier with a performance at least equivalent to 2 layers of Grade D paper. The individual layers shall be installed independently. An approved house wrap may be used for the 1st layer and metal lath with approved paper backing may be the 2nd layer (Note: ZIP wall sheathing with seam tape qualifies as the first layer).

13 OUTLOOKER DETAIL

SCALE: N.T.S.

REVISIONS	BY
1 03/08/19	DWB

STRUCTURAL ENGINEERING:

STRUCTURAL SYSTEMS OF NORTH FLORIDA
1634 S.E. 47th STREET, SUITE #3
CAPE CORAL, FL 33904
(239) 549-4554
CA# 8829

DESIGNED IN ACCORDANCE WITH FLORIDA BUILDING CODE 6th EDITION (2017) RESIDENTIAL

BUILDER:

STRUCTURAL DETAILS FOR 1526 SIGNATURE VILLA

FETTERBRUSH PLACE
VENICE, FLORIDA
LOTS: 113-114 SUBDIVISION: WEST VILLAGES

FOR BUILDERS FIRST SOURCE TRUSSES, JOB # MASTER, DATED 01/04/19, REVISED: NONE

DESIGN/DRAWN	DWB/DWB
CHECKED	DWB
DATE	01/15/19
SCALE	AS NOTED
JOB NO.	DR10708
SHEET	S-1

SHEET 1 OF 3

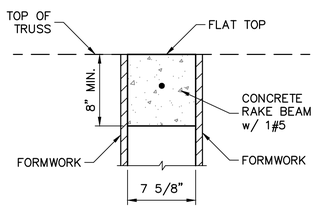

CROSS SECTION

1 FLAT TOP DETAIL
SCALE: 1-1/2" = 1'-0"

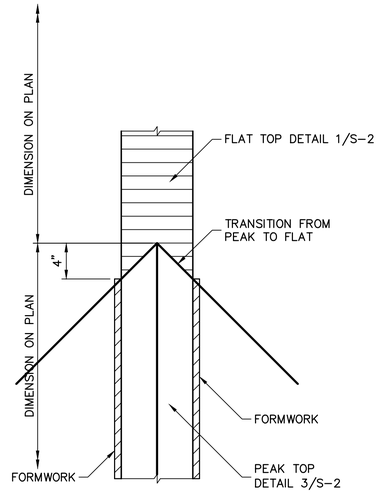

PLAN VIEW

2A

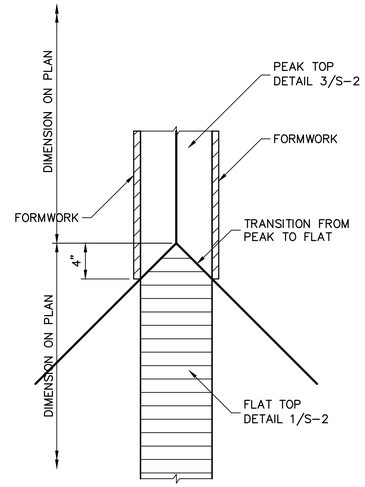

PLAN VIEW

2B

PEAK TRANSITION DETAIL
SCALE: 1-1/2" = 1'-0"

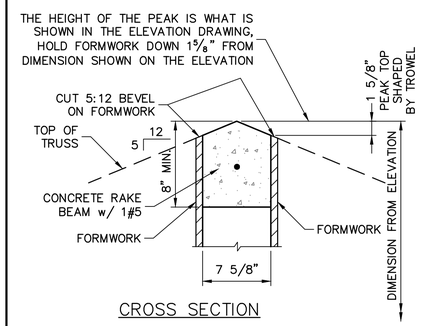

CROSS SECTION

3 PEAK TOP DETAIL
SCALE: 1-1/2" = 1'-0"

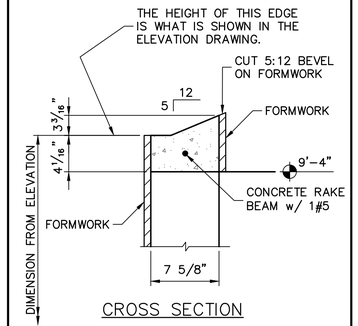

CROSS SECTION

4 SLANT TOP DETAIL
SCALE: 1-1/2" = 1'-0"

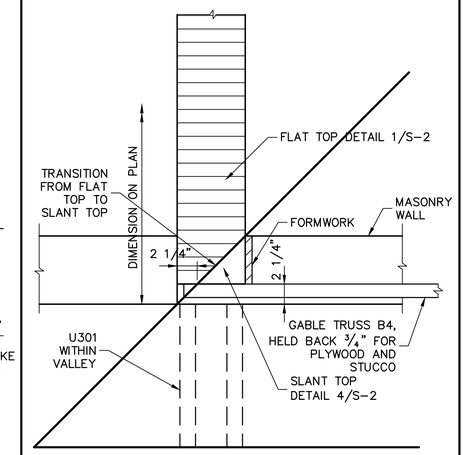

PLAN VIEW

5 SLANT TRANSITION DETAIL
SCALE: 1-1/2" = 1'-0"

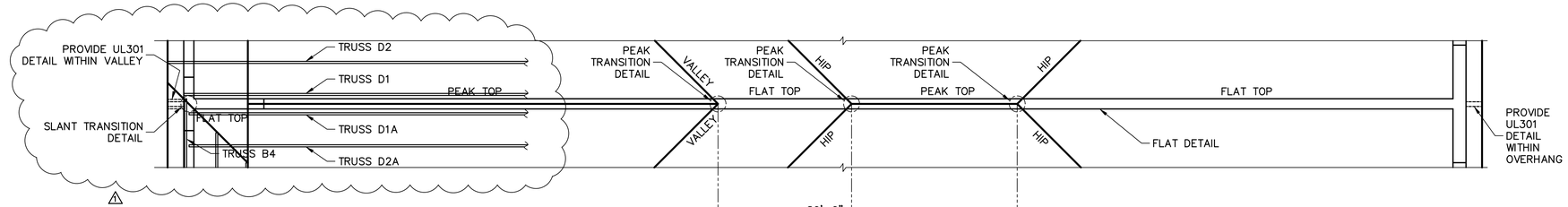

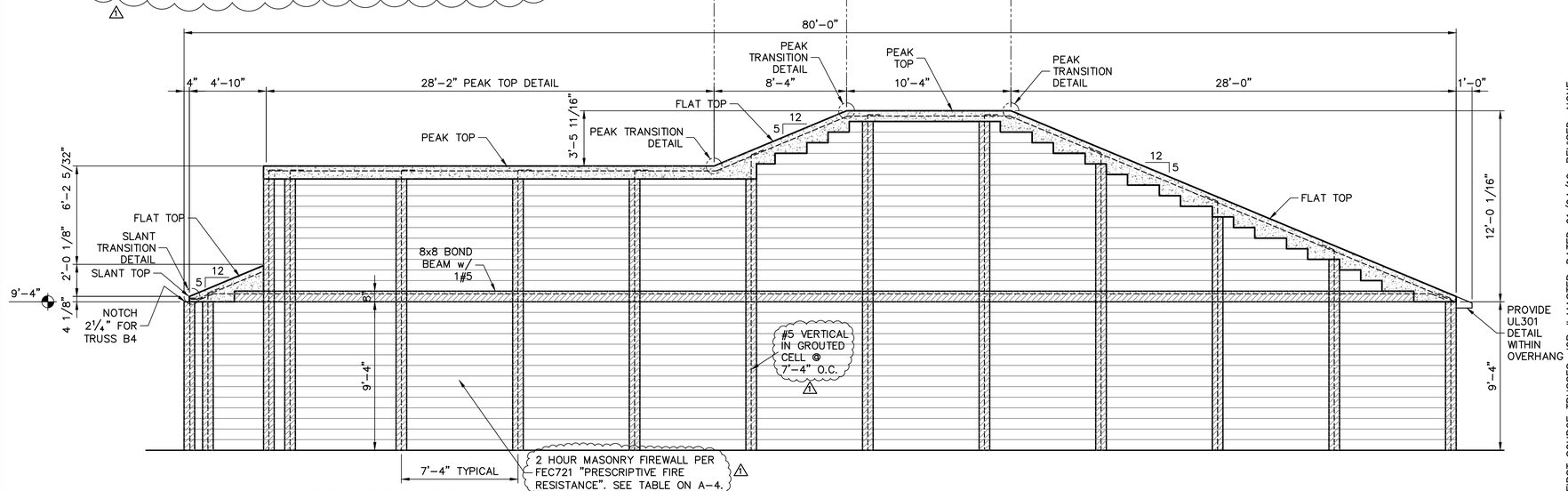

6 SECTION FOR 1526 VILLA FOR 5:12 ROOF PITCH
SCALE: 1/4" = 1'-0"

FOR BUILDERS FIRST SOURCE TRUSSES, JOB # MASTER, DATED 01/04/19, REVISED: NONE

DESIGNED IN ACCORDANCE WITH FLORIDA BUILDING CODE 6th EDITION (2017) RESIDENTIAL

REVISIONS	BY
1 03/08/19	DWB

STRUCTURAL ENGINEERING:

STRUCTURAL SYSTEMS OF NORTH FLORIDA
1634 S.E. 47th STREET, SUITE #3
CAPE CORAL, FL 33904
(239) 549-4554
CA# 8829

BUILDER:

STRUCTURAL DETAILS FOR 1526 SIGNATURE VILLA

FETTERBRUSH PLACE
VENICE, FLORIDA
LOTS: 113-114 SUBDIVISION: WEST VILLAGES

DESIGN/DRAWN	DWB/DWB
CHECKED	DWB
DATE	01/15/19
SCALE	AS NOTED
JOB NO.	DR10708
SHEET	S-2

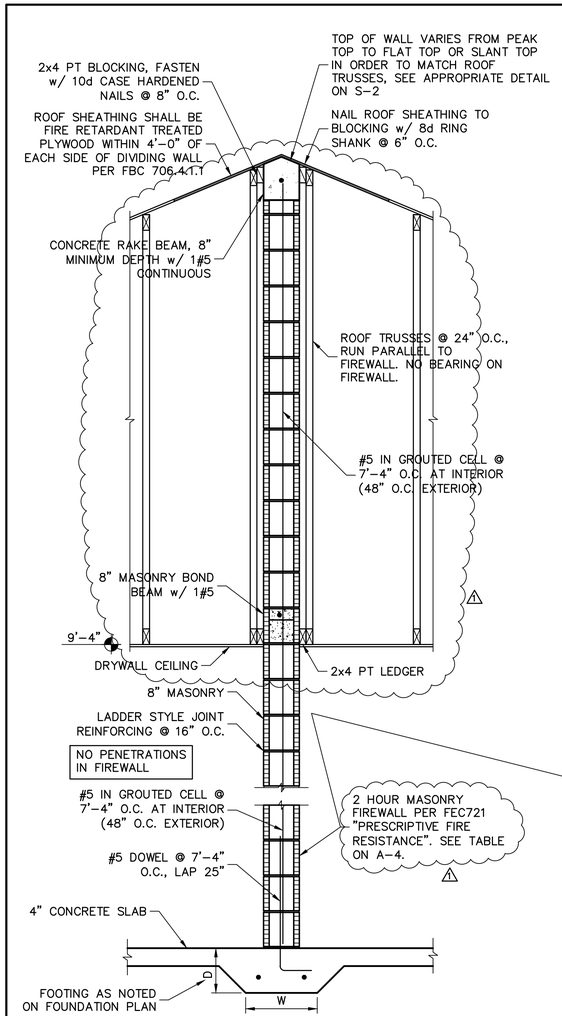

1 2 HOUR FIREWALL AT GARAGE
SCALE: 3/4" = 1'-0"

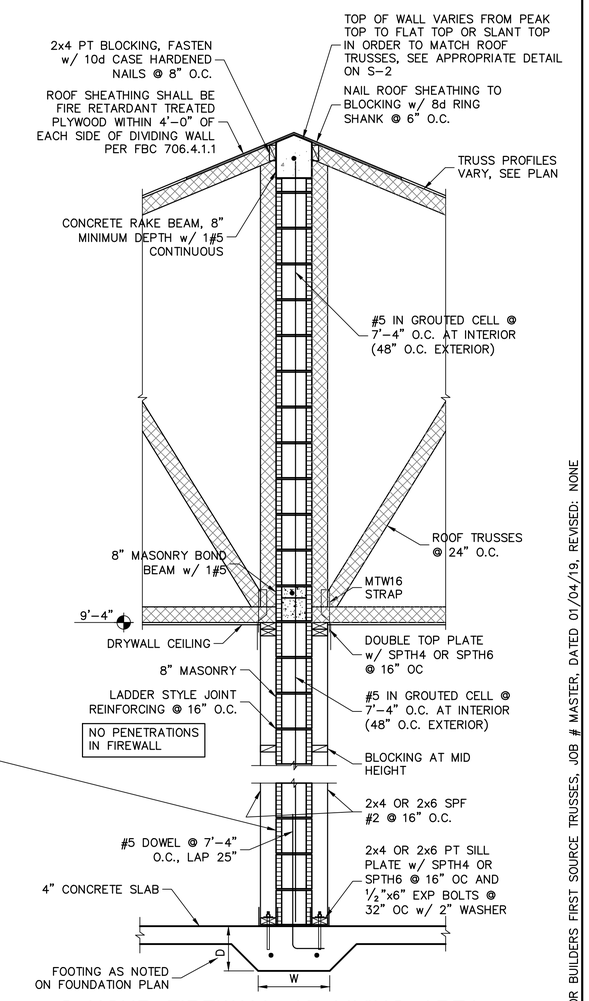

2 2 HOUR FIREWALL AT LIVING AREA
SCALE: 3/4" = 1'-0"

FOR BUILDERS FIRST SOURCE TRUSSES, JOB # MASTER, DATED 01/04/19, REVISED: NONE

DESIGNED IN ACCORDANCE WITH FLORIDA BUILDING CODE 6th EDITION (2017) RESIDENTIAL

REVISIONS	BY
1 03/08/19	DWB

STRUCTURAL ENGINEERING:
STRUCTURAL SYSTEMS OF NORTH FLORIDA
1634 S.E. 47th STREET, SUITE #3
CAPE CORAL, FL 33904
(239) 549-4554
CA# 8829

BUILDER:

STRUCTURAL DETAILS FOR 1526 SIGNATURE VILLA

FETTERBRUSH PLACE
VENICE, FLORIDA
LOTS: 113-114 SUBDIVISION: WEST VILLAGES

DESIGN/DRAWN	DWB/DWB
CHECKED	DWB
DATE	01/15/19
SCALE	AS NOTED
JOB NO.	DR10708
SHEET	S-3

SHEET 3 OF 3