Community Development

18400 Murdock Circle, Port Charlotte, FL 33948
Phone: 941.743.1201 FAX: 941.764.4907
Zoning: 941.743.1964
www.CharlotteCountyFl.gov
"To exceed expectations in the delivery of public services"

Print Form

For Office Use Only
Permit Number
20 _____
Application Date
_____
CSR Initials _____

RESIDENTIAL ONE AND TWO SINGLE FAMILY DWELLING DATA SUMMARY SHEET
Florida Building Code Sixth Edition (2017)

OWNER NAME: D. R. HORTON, INC. **PROJECT ADDRESS:** Lot 276 7289 West Lenox Cir Punta Gorda FL 33950
Number & Street City, State, & Zipcode

Applicable Codes: Building, Mechanical, Plumbing, Accessibility, & Energy Codes - 6th Edition (2017) Florida Building Code, Residential Volume. Electrical Code - NFPA 70 & NEC 2014

Manufacturer's Product Approvals

Doors: SEE ATTACHED
Overhead Doors: SEE ATTACHED
Windows: SEE ATTACHED
Mitered Glass: SEE ATTACHED
Roof Coverings: SEE ATTACHED
Protection of Openings:
Soffit: SEE ATTACHED
Shutters: SEE ATTACHED

Method of Design per Florida Building Code (FBC) R301: **Designer's Name:** STRUCTURAL SYSTEM OF NORTH FL

☐ Florida Building Code, 6th Ed (2017) ☒ ASCE 7 ☐ AISI S230 ☐ AF & PA ☐ MAF Guide
☐ ICC 600 ☐ TMS/ASCE ☐ Other: _____

Design Data:

Basic Wind Speed (Vult) 160 mph (Figure R301.2(4) Risk Category: ☐ I ☒ II

Nominal Design Wind Speed (Vasd) 124 m.p.h. Flood Design Data N/A Final Floor Elevation see site plan

Exposure Category Section (R301.2.1.4) ☐ B ☒ C ☐ D Soil Design Load-Bearing Value 2000 PSF

Structural Forces (Section R301.4 / 301.5 / 3601.6)

Floor Design: Live Load 40 p.s.f Dead Load SLAB ON GRADE p.s.f
Roof Design: Live Load 20 p.s.f Dead Load TC=20 BC=10 p.s.f Roof Slope 5:12

Window and Door Wind Pressure Design Loading: Mean roof height 15 ft

Windows + 33.5/-44.8 p.s.f Doors + 33.5/-44.8 p.s.f Garage Doors + 29.4/-33.3 p.s.f

Components and Cladding Design Pressures:

Zone 1: 19.2/-30.6 p.s.f Zone 2: 19.2/-53.2 p.s.f Zone 3: 19.2/-78.8 p.s.f Zone 4: 33.5/-36.3 p.s.f Zone 5: 33.5/-44.8 p.s.f

Area Tabulation: TOTAL (Sq. Ft.) **2,057**

This item has been digitally signed by Derek Bergener on the date adjacent to the seal. Printed copies of this document are not considered signed and sealed and the signature must be verified on any electronic copies.

Living (Sq. Ft.) 1,503 Garage (Sq. Ft.) 391 Lanai (Sq. Ft..) 143
Entry (Sq. Ft.) 20 Storage (Sq. Ft.) _____ Other (Sq. Ft.) _____

I certify to the best of my knowledge and belief that these plans and specifications have been designed to comply with the structural portion of the Building Code for wind, flood and gravity loads as amended and enforced by the permitting jurisdiction.

Signature: _____ Date: _____

DEREK W. BERGENER
LICENSE
No. 58552
STATE OF
FLORIDA
PROFESSIONAL ENGINEER

Architect / Engineer Seal

12/2017 jg

Community Development

18400 Murdock Circle, Port Charlotte, FL 33948
Phone: 941.743.1201 FAX: 941.764.4907
Zoning: 941.743.1964
www.CharlotteCountyFl.gov
"To exceed expectations in the delivery of public services"

Print Form

For Office Use Only
Permit Number
20 _____
Application Date
_____
CSR Initials _____

RESIDENTIAL ONE AND TWO SINGLE FAMILY DWELLING DATA SUMMARY SHEET
Florida Building Code Sixth Edition (2017)

OWNER NAME: D. R. HORTON, INC. **PROJECT ADDRESS:** Lot 277 7281 West Lenox Cir Punta Gorda FL 33950
Number & Street City, State, & Zipcode

Applicable Codes: Building, Mechanical, Plumbing, Accessibility, & Energy Codes - 6th Edition (2017) Florida Building Code, Residential Volume. Electrical Code - NFPA 70 & NEC 2014

Manufacturer's Product Approvals

Doors: SEE ATTACHED
Overhead Doors: SEE ATTACHED
Windows: SEE ATTACHED
Mitered Glass: SEE ATTACHED
Roof Coverings: SEE ATTACHED
Protection of Openings:
Soffit: SEE ATTACHED
Shutters: SEE ATTACHED

Method of Design per Florida Building Code (FBC) R301: **Designer's Name:** STRUCTURAL SYSTEM OF NORTH FL

☐ Florida Building Code, 6th Ed (2017) ☒ ASCE 7 ☐ AISI S230 ☐ AF & PA ☐ MAF Guide
☐ ICC 600 ☐ TMS/ASCE ☐ Other: _____

Design Data:

Basic Wind Speed (Vult) 160 mph (Figure R301.2(4) Risk Category: ☐ I ☒ II

Nominal Design Wind Speed (Vasd) 124 m.p.h. Flood Design Data N/A Final Floor Elevation see site plan

Exposure Category Section (R301.2.1.4) ☐ B ☒ C ☐ D Soil Design Load-Bearing Value 2000 PSF

Structural Forces (Section R301.4 / 301.5 / 3601.6)

Floor Design: Live Load 40 p.s.f Dead Load SLAB ON GRADE p.s.f
Roof Design: Live Load 20 p.s.f Dead Load TC=20 BC=10 p.s.f Roof Slope 5:12

Window and Door Wind Pressure Design Loading: Mean roof height 15 ft

Windows + 33.5/-44.8 p.s.f Doors + 33.5/-44.8 p.s.f Garage Doors + 29.4/-33.3 p.s.f

Components and Cladding Design Pressures:

Zone 1: 19.2/-30.6 p.s.f Zone 2: 19.2/-53.2 p.s.f Zone 3: 19.2/-78.8 p.s.f Zone 4: 33.5/-36.3 p.s.f Zone 5: 33.5/-44.8 p.s.f

Area Tabulation: TOTAL (Sq. Ft.) **2,057**

This item has been digitally signed by Derek Bergener on the date adjacent to the seal. Printed copies of this document are not considered signed and sealed and the signature must be verified on any electronic copies.

Living (Sq. Ft.) 1,503 Garage (Sq. Ft.) 391 Lanai (Sq. Ft..) 143
Entry (Sq. Ft.) 20 Storage (Sq. Ft.) _____ Other (Sq. Ft.) _____

I certify to the best of my knowledge and belief that these plans and specifications have been designed to comply with the structural portion of the Building Code for wind, flood and gravity loads as amended and enforced by the permitting jurisdiction.

Signature: _____ Date: _____

DEREK W. BERGENER
LICENSE
No. 58552
STATE OF
FLORIDA
PROFESSIONAL ENGINEER

Architect / Engineer Seal

12/2017 jg

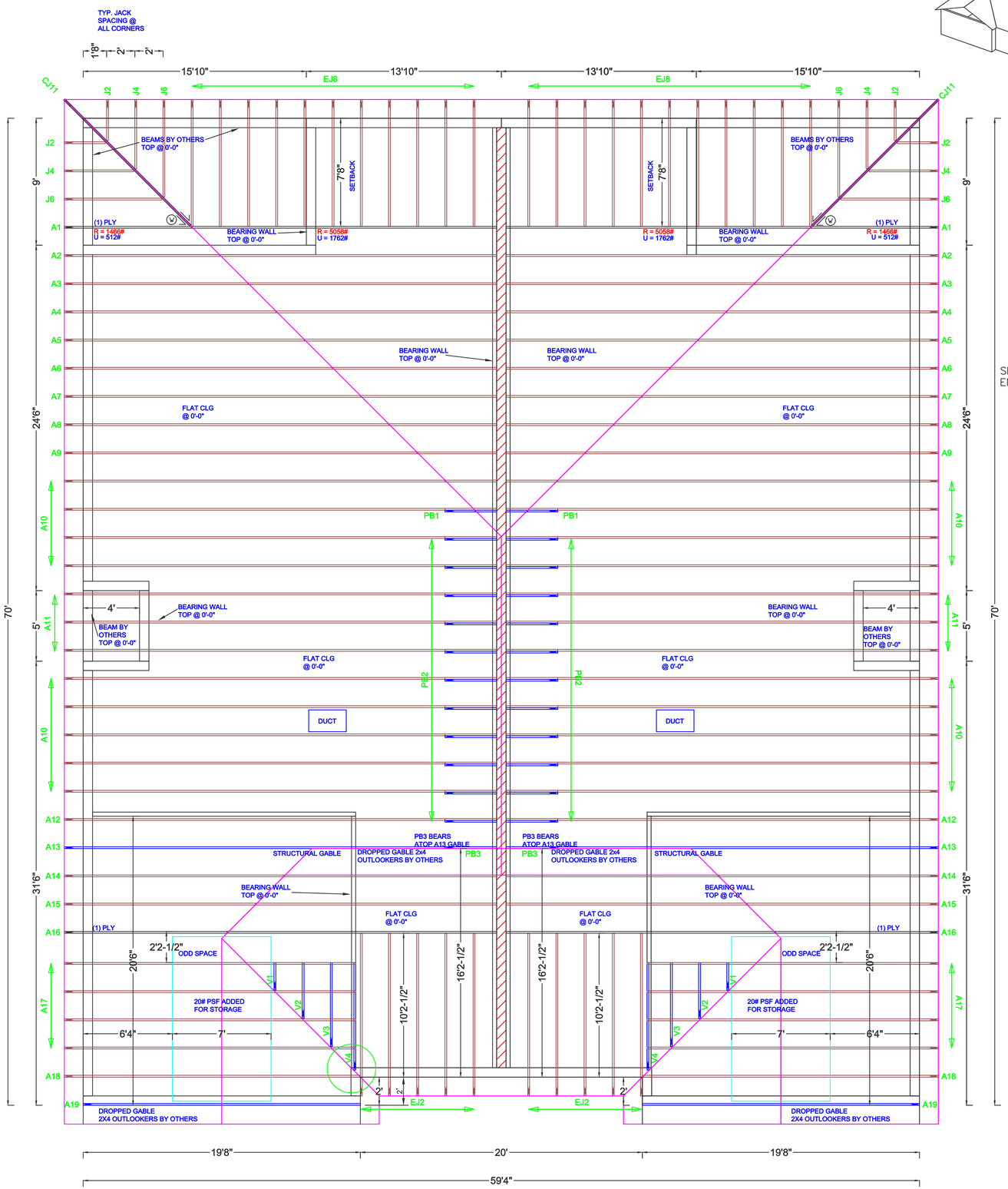

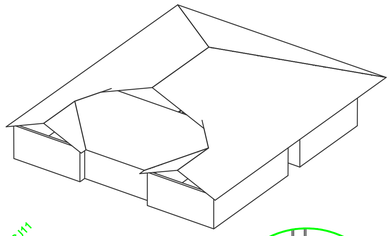

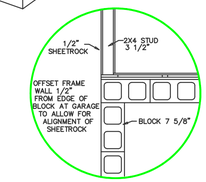

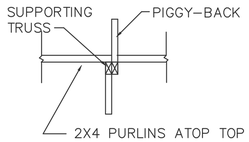

SEE SUPPORTING TRUSS & PIGGY-BACK ENGINEERING FOR ADDITIONAL INFORMATION

SCAB PIGGY-BACK DETAIL

TYPICAL JACK CUTS

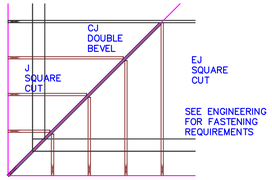

Engineer of Record for the Structure
Structural Systems of N. Fl, Inc.
Derek Bergener, PE 58552
1634 SE 47th Street #3
Cape Coral, FL 33904

This document has been reviewed for conformance with the design intent of the structure and specified design criteria.

☑ Accepted As-Is ☐ Accepted As Noted ☐ Revise and Resubmit

LANAI AND ENTRY ARE EXPOSED TO WIND AND DESIGNED PER CRITERIA SHOWN

DESIGN CRITERIA

TOP CHORD LIVE LOAD	20
TOP CHORD DEAD LOAD	20
BOTTOM CHORD LIVE LOAD NON-CONCURRENT	10#
BOTTOM CHORD DEAD LOAD	10
TOTAL LOAD	50
DURATION FACTOR	1.25
WIND DESIGN SPEED (MPH)	160
ASCE 7-10 CAT II EXP C MWFRS CLOSED FBC 2017	
MAX. WALL HT FOR WIND LOAD	8'-8"

TILE

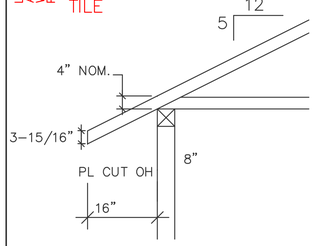

TYPICAL END DETAIL

UNLESS NOTED

REACTION VALUES ARE UNDER 5000#

UPLIFT VALUES ARE UNDER 1000#

ALL TRUSSES 24"o.c. UNLESS NOTED OTHERWISE

********CAUTION********

DO NOT ATTEMPT TO ERECT TRUSSES WITH-OUT REFERRING TO THE ENGINEERING DWGS.

IT IS NECESSARY TO REFER TO THE ENGINEERING DRAWINGS FOR NUMBER OF MEMBERS, BEARING LOCATION, ORIENTATION AND WEB BRACING

REFER TO WTCA/TPI BSCI-B1 SUMMARY SHEET FOR HANDLING METHODS & TEMPORARY BRACING, WHICH IS ALWAYS REQUIRED

BEARING HEIGHTS BASED ON PLANS PROVIDED TO SCOSTA CORP. "+/-" BEARING DIFFERENCES SHOWN ARE CRITICAL. IF ANY HEIGHTS DEVIATE - INFORM SCOSTA CORP.

BEARING WALL & BEAM HEIGHTS

8'-8" A.F.F.	0'-0"	ELEV.
RAKED BEAM		ELEV.
		ELEV.
		ELEV.
		ELEV.
		ELEV.
		ELEV.
		ELEV.

TYPICAL HANGER SCHEDULE

C	SIMPSON HUS 26	M	SIMPSON HGUS 28-3
F	SIMPSON HUS 28	N	SIMPSON HHUS 48
H	SIMPSON HGUS 28	P	SIMPSON LUS 24
I	SIMPSON HGUS 28-2	B	SIMPSON THA 422
W	SIMPSON THJA26	X	

HANGER VALUES HAVE BEEN BASED ON 16D COMMON NAILS EXCEPT THE FOLLOWING
LUS24 - 10D COMMON THJA26 - 10D x 1-1/2

*******ATTENTION*******

APPROVAL OF THIS TRUSS LAYOUT IS NECESSARY BEFORE FABRICATION CAN BEGIN. VERIFY DIMENSIONS, PITCHES, OVERHANGS, ELEVATIONS, CEILING & BEARING CONDITIONS. SCOSTA CORPORATION IS RESPONSIBLE FOR ACCURACY IN ACCORDANCE WITH PLANS AND/OR INFORMATION PROVIDED BY CUSTOMER, WITH ANY DEVIATIONS NOTED HEREIN. CUSTOMER IS RESPONSIBLE TO VERIFY ACCURACY OF INFORMATION AND PLANS PROVIDED TO SCOSTA CORPORATION, AND TO VERIFY CONFORMANCE TO FIELD CONDITIONS, AND/OR OWNER CHANGES. TRUSSES WILL BE BUILT IN ACCORDANCE WITH THE APPROVED LAYOUT.

APPROVED BY: _____

DATE: _____ REQUESTED DELIVERY DATE: _____

JOBSITE CONTACT NAME: _____

PHONE #: _____

E-MAIL: _____

SCOSTA CORP.

WOOD, STEEL OR TIMBER ROOF & FLOOR TRUSSES

3670 COMMERCE CENTER DRIVE
SEBRING, FL 33870
(863) 385-8242

SCALE:	DATE:	REVISED BY:	DRAWN BY:
1/4"=1'-0"	08/27/17	KD 12/03/19	CD

JOB ADDRESS: 1498 TWIN VILLA

1 OF 1

CUSTOMER: D.R. HORTON

JOB #: 44060

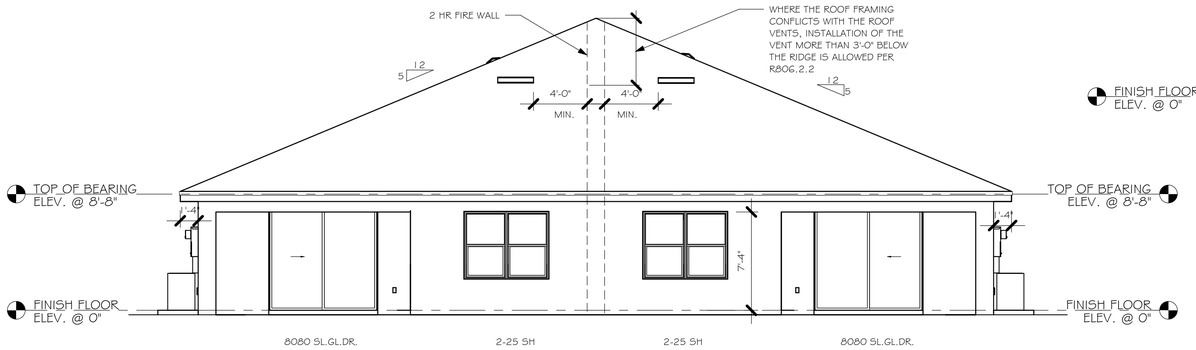

REAR ELEVATION
3/16" = 1'-0"

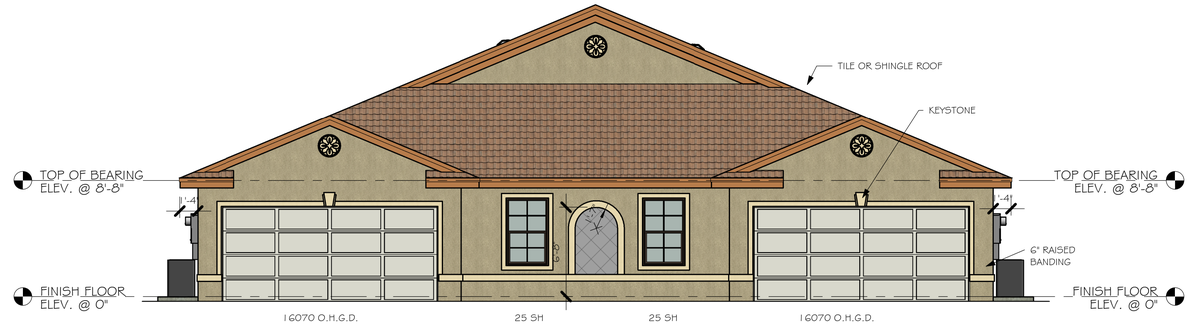

FRONT ELEVATION
3/16" = 1'-0"

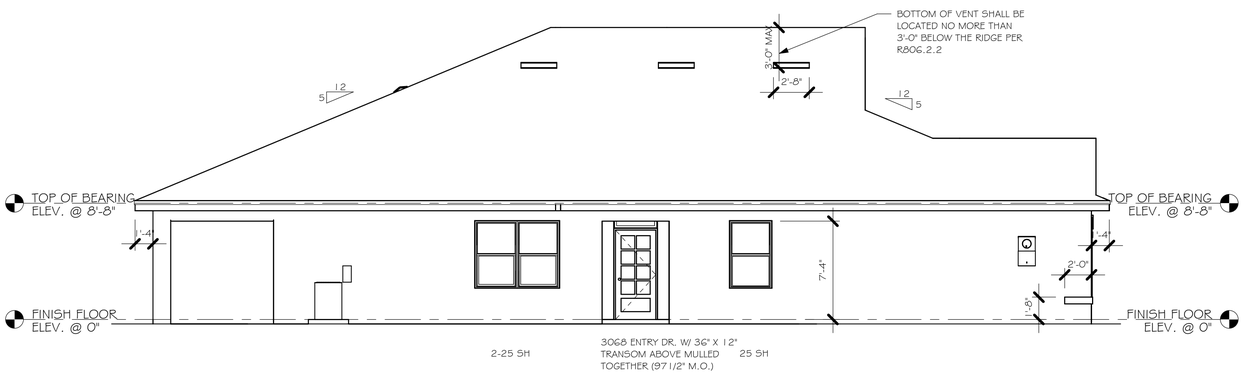

LEFT ELEVATION
3/16" = 1'-0"

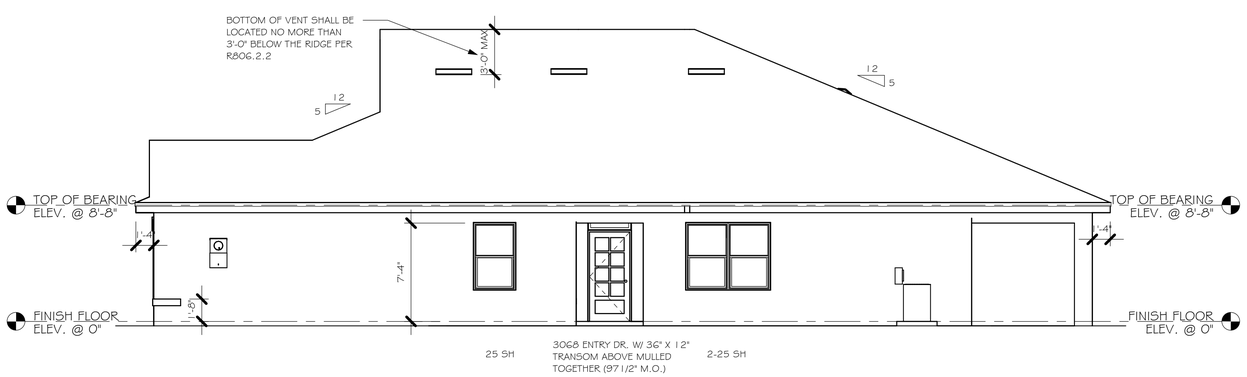

RIGHT ELEVATION
3/16" = 1'-0"

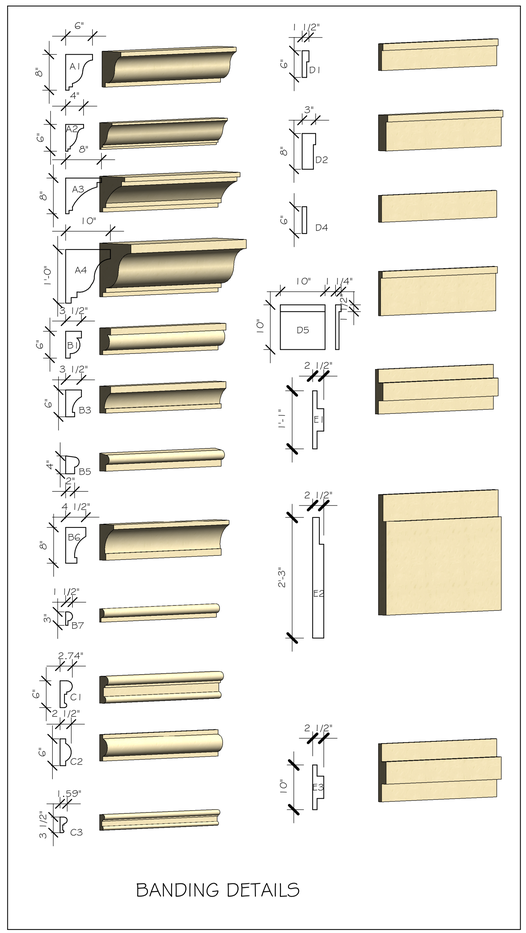

BANDING DETAILS

This is a multi-page document. I performed structural engineering only on those pages which contain my seal, Derek Bergener, and company name Structural Systems.

DESIGN IN ACCORDANCE WITH THE RESIDENTIAL FLORIDA BUILDING CODE 2017 - 6TH EDITION

D·R·HORTON® America's Builder

Gulf Coast Drafting & Design, Inc.
EMAIL: PLANS@GULFCOASTDRAFTING.COM
PHONE: 239-540-1822
1515 SE 47TH ST. CAPE CORAL, FL 33904

STRUCTURAL SYSTEMS OF NORTH FLORIDA
1634 SE 47th ST. SUITE 43
CAPE CORAL, FL 33904
(239) 549-4554
CA# 9859

This signature and seal is for work performed by the Structural Engineer of Record (SER) and applies only to structural components of this plan and may not be used for other disciplines such as architectural, mechanical, plumbing, electrical, fire, life safety, accessibility, energy, site work, or civil or any other non-structural components.

STRUCTURAL ENGINEER'S SIGNATURE
Derek Bergener on the date adjacent to the seal. Printed copies of this document are not considered signed and sealed and the SER assumes no responsibility for any electronic copies.

DEREK W. BERGENER LICENSE No. 58552 STATE OF FLORIDA PROFESSIONAL ENGINEER

LOT: 276-277
SUBDIVISION: WATERFORD II TVs
ADDRS: 7289-7281 WEST LENOX CIR.
D.R.H. #: 579170065-066

MODEL 1498
VILLA E
GCD JOB # 11612

DATE: 05/20/20
DRAWN BY: JSL
CHECKED BY: JWC
REVISED:
PLAN: ELEVATION
SCALE: As indicated

A-1

L:\0-New Data\1-MASTER 2019\2019-BUILDERS\DR HORTON 2019\SUBDIVISION\WATERFORD II TVS\11612 LOT 276-277 1498 EREVIT\11612 1498 E.rvt

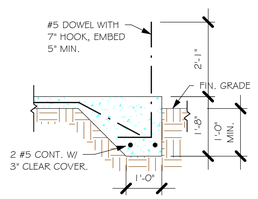

"F3" FOOTING

1/2" = 1'-0"

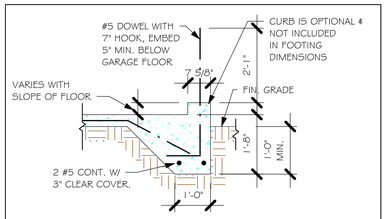

"F3" WITH CURB AT GARAGE

1/2" = 1'-0"

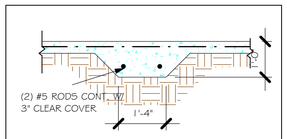

"F5" FOOTING

1/2" = 1'-0"

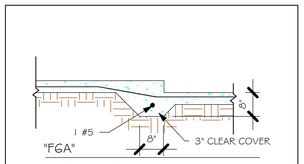

"FGA"

1/2" = 1'-0"

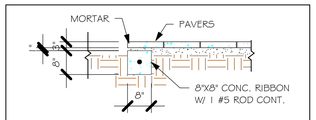

"P" PAVERS DETAIL ENTRY/ LANAI

1/2" = 1'-0"

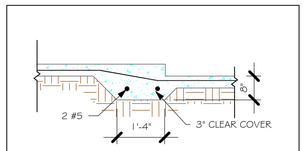

"FG" STEP DOWN

1/2" = 1'-0"

PAD FOOTING SCHEDULE

USED	TYPE	LENGTH	WIDTH	DEPTH	BOTTOM REINF. LONG WAY	BOTTOM REINF. SHORT WAY	REMARKS
X	A	2'-6"	2'-6"	1'-0"	3-#5	3-#5	-
	B	3'-0"	3'-0"	1'-0"	4-#5	4-#5	-
	C	3'-6"	3'-6"	1'-0"	4-#5	4-#5	-
	D	4'-0"	4'-0"	1'-2"	5-#5	5-#5	-
	E	5'-0"	5'-0"	1'-2"	6-#5	6-#5	-

WALL FOOTING SCHEDULE

USED	TYPE	LENGTH	WIDTH	DEPTH	BOTTOM REINFORCING	SHAPE
	F1	CONT.	1'-4"	0'-8"	2-#5	
	F2	CONT.	1'-8"	0'-10"	2-#5	
X	F3	CONT.	1'-0"	1'-8"	2-#5	ADD CURB TO GARAGE, SEE DETAIL
	F4	CONT.	1'-4"	1'-8"	2-#5	
X	F5	CONT.	1'-4"	1'-0"	2-#5	
X	F6	CONT.	1'-4"	1'-0"	2-#5	
X	F6A	CONT.	0'-8"	0'-8"	1-#5	
	TE	CONT.	0'-8"	0'-8"	1-#5	

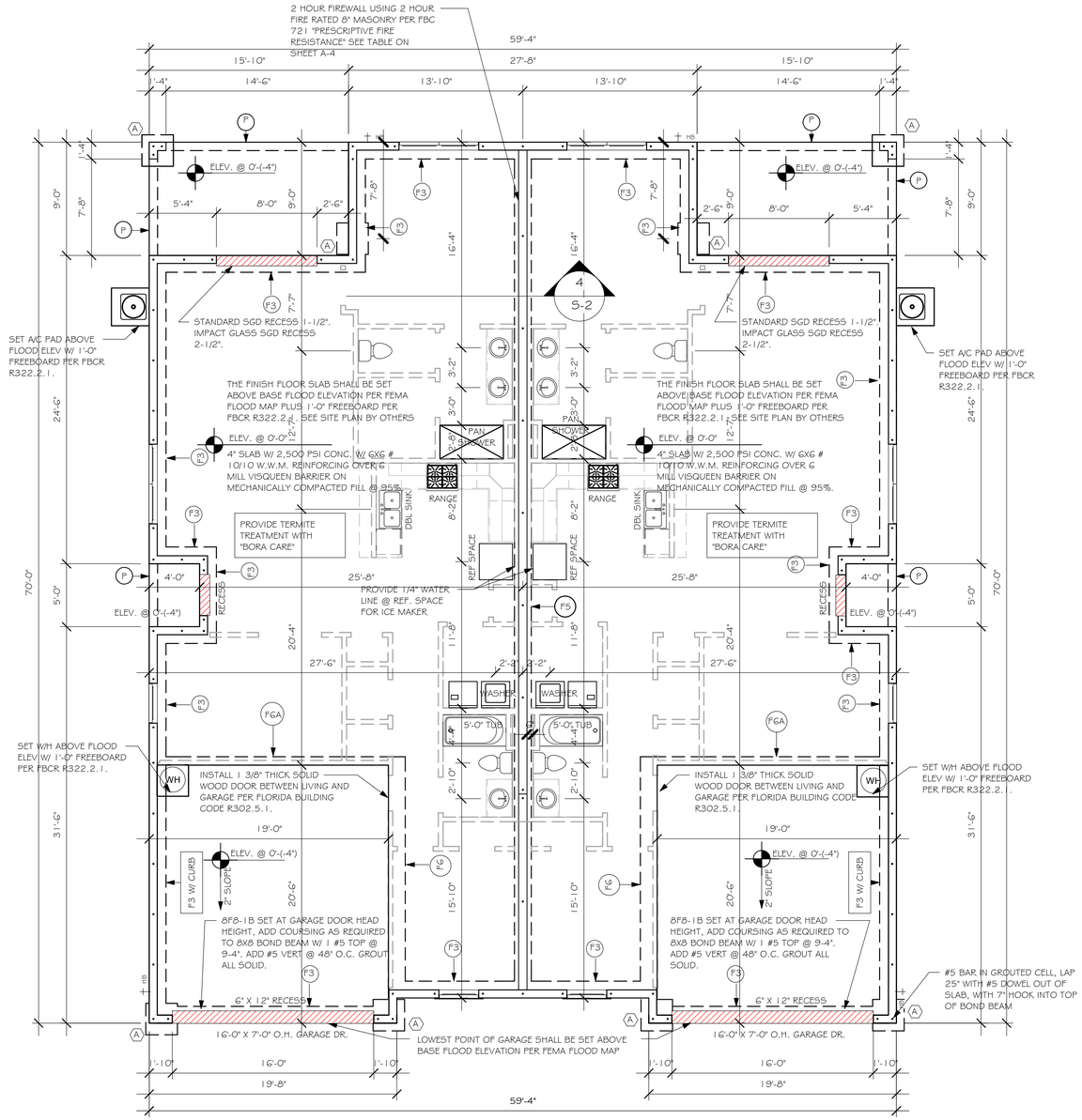

FOUNDATION PLAN

3/16" = 1'-0"

FOUNDATION PLAN

SCALE: 3/16" = 1'-0"

PLAN NOTES:

1. **TOP OF GROUND FLOOR SLAB DATUM ELEVATION 0'-0"**
2. **"F#" DENOTES CONTINUOUS WALL FOOTING TYPE PER SCHEDULE THIS SHEET.**
3. **# DENOTES PAD FOOTING AT CONCENTRATED LOADS PER SCHEDULE THIS SHEET.**
4. **PROVIDE #5 VERTICAL REINFORCING AT DOT LOCATIONS SHOWN ON PLAN FROM FOOTING TO BOND BEAM.**
5. **ALL DIMENSIONS ARE TO OUTSIDE FACE OF MASONRY WALLS. SOME SLAB EDGES MAY EXTEND BEYOND FACE OF WALL.**
6. **FOR DIMENSIONS OF ROUGH OPENINGS IN MASONRY WALLS, COORDINATE WITH WINDOW/ DOOR SUPPLIER.**
7. **PROVIDE PRESSURE TREATED BUCKS AT WINDOWS/ DOORS PER DETAIL 7/S-1.**

DESIGN IN ACCORDANCE WITH THE RESIDENTIAL FLORIDA BUILDING CODE 2017 - 6TH EDITION

D·R·HORTON® America's Builder

Gulf Coast Drafting & Design, Inc.
EMAIL: PLANS@GULFCOASTDRAFTING.COM
PHONE: 239-540-1822
1515 SE 47TH ST. CAPE CORAL, FL 33904

This signature and seal is for work performed by the Structural Engineer of Record (SER) and shall be applicable only to structural components of this plan. It does not include other disciplines such as architectural, mechanical, plumbing, electrical, fire, life safety, accessibility, energy, site work, roof or pool structures.

CERTIFICATE OF AUTHORIZATION
STRUCTURAL SYSTEMS OF NORTH FLORIDA
1634 SE 47th ST. SUITE #3
CAPE CORAL, FLORIDA 33904
(239) 549-4554
CA# 8859

DEREK W. BERGENER ★ STATE OF FLORIDA ★ No. 58552 ★ LICENSED PROFESSIONAL ENGINEER

LOT: 276-277

SUBDIVISION: WATERFORD II TVs

ADDRS: 7289-7281 WEST LENOX CIR.

D.R.H. #: 579170065-066

MODEL 1498

VILLA E

GCD JOB # 11612

DATE: 05/20/20

DRAWN BY: JSL

CHECKED BY: JWC

REVISED:

PLAN: FOUNDATION

SCALE: As indicated

A-2

L:\0-New Data\1-MASTER 2019\2019-BUILDERS\DR HORTON 2019\SUBDIV\SIONS\WATERFORD II TVS\11612 LOT 276-277 1498 E\REVIT\11612 1498 E.rvt

DOOR SCHEDULE

TYPE MARK	DESCRIPTION	MANUFACTURER	HEIGHT	WIDTH	ZONE 4	ZONE 5	QTY
1	16070 OHGD	GARAGE DOOR	7'-0"	16'-0"	+28.2/-31.5	+28.2/-31.5	2
2	2-4080 SL. GL. DR.	DISTINCTION	8'-0"	8'-0"	+29.4/-33.3	+29.4/-33.3	2
3	3068 ENTRY	DISTINCTION	6'-8"	3'-0"	+33.5/-36.3	+33.5/-44.8	2

WIIND PRESSURES PER ASCE7-10 160 MPH, EXPOSURE C AND CONVERTED TO ALLOWABLE STRESS DESIGN PRESSURES USING 0.6W LOAD FACTOR. Vasd= 124 MPH

GARAGE DOOR ASSUMES 2' IN ZONE 5.

WINDOW SCHEDULE

MARK	DESCRIPTION	MANUFACTURER	HEIGHT	WIDTH	ZONE 4	ZONE 5	QTY
A	25 SH		5'-3"	3'-2"	+33.5/-36.3	+33.5/-44.8	4
B	2-25 SH		5'-3"	6'-4"	+33.5/-36.3	+33.5/-44.8	4
C	36" X 12" TRANSOM		1'-0"	3'-0"	+33.5/-36.3	+33.5/-44.8	2

WIIND PRESSURES PER ASCE7-10 160 MPH, EXPOSURE C AND CONVERTED TO ALLOWABLE STRESS DESIGN PRESSURES USING 0.6W LOAD FACTOR. Vasd= 124 MPH

DOOR HEADERS

6'-8" BI-FOLD	HEADER HEIGHT	82" A.F.F.
6'-8" SWING	HEADER HEIGHT	82 1/2" A.F.F.
8'-0" SWING	HEADER HEIGHT	98 1/2" A.F.F.

PLAN NOTES

1) VERIFY ALL ROUGH OPENING DIMENSIONS FOR ALL WINDOWS AND DOORS

2) PROVIDE SAFETY GLAZING WITHIN 24" FROM EXIT PER FLORIDA BUILDING CODE R 308.4.2.

3) PROVIDE SAFETY GLAZING AT BATH/ SHOWER PER FLORIDA BUILDING CODE R 308.4.5.

4) NON BEARING INTERIOR FRAME WALLS SHALL BE FRAMED W/ WOOD OR METAL STUDS. SPACING SHALL NOT EXCEED 24" O.C. (NON BEARING WALLS ONLY)

5) PROVIDE DEAD WOOD IN ATTIC FOR OVERHEAD GARAGE DOOR HARDWARE

6) KITCHEN KNEE WALL TO BE FRAMED W/ TOP @ 34 1/2" A.F.F.

7) INSTALL SMOOTH WALLS IN KITCHEN AND ALL BATHROOM AREAS

8) WHERE DRYWALL CEILING IS APPLIED TO TRUSSES @ 24" O.C. USE 5/8" DRYWALL OR 1/2" SAG RESISTANT PER SEC. 702.3.5

9) THE GARAGE SHALL BE SEPARATED FROM THE RESIDENCE & ATTIC BY NOT LESS THEN 1/2" GYPSUM BOARD APPLIED TO THE GARAGE SIDE. GARAGES BENEATH HABITABLE ROOMS SHALL BE SEPARATED WITH NOT LESS THAN 5/8" TYPE "X" GYPSUM BOARD OR EQUIVALENT. WHERE THE SEPARATIION IS A FLOOR - CEILING ASSEMBLY, THE STRUCTURE SUPPORTING THE SEPARTION SHALL ALSO BE PROTECTED BY NOT LESS THAN 1/2" GYPSOM BOARD OR EQUIVALENT

10) INSTALL 1 3/8" THICK SOLID WOOD DOOR BETWEEN LIVING AND GARAGE PER FLORIDA BUILDING CODE R302.1.5.

11) ALL WINDOWS INSTALLED 72" ABOVE GRADE MUST COMPLY WITH R612.2 MIN 24" SILL HEIGHT OR PROVIDED WITH AN APPROVED WINDOW FALL PRVENTION DEVICE

12) ALL CLOSET SHELVES TO BE 12", ALL PANTRY & LINEN TO BE (4)-16" SHELVES 18" O.F.F. W/ 15" INCREMENT.

13) ALL MECHANICAL AND ELECTRICAL EQUIPMENT TO BE INSTALLED AT OR ABOVE FLOOD PLUS 1'-0" FREEBOARD.

INTERIOR DOOR SCHEDULE

MARK	DOOR WIDTH	NOTES
1	3'-0"	P.K. = POCKET DOOR
2	2'-8"	B.F. = BI-FOLD DOOR
3	2'-6"	B.P. = BI-PASS DOOR
4	2'-4"	L.V. = LOUVERED DOOR
5	2'-0"	
6	1'-8"	
7	1'-6"	
8	2'-11"	

SQUARE FOOTAGE UNIT #1

LIVING AREA	1,503
GARAGE AREA	391
LANAI AREA	143
FRONT PORCH/ ENTRY AREA	20
TOTAL SQUARE FOOTAGE	2,057

SQUARE FOOTAGE UNIT #2

LIVING AREA	1,503
GARAGE AREA	391
LANAI AREA	143
FRONT PORCH/ ENTRY AREA	20
TOTAL SQUARE FOOTAGE	2,057

CABINET BACKING

KITCHEN	UPPER TOP @ 84"	BASE TOP @ 35"
MASTER BATH	UPPER	BASE TOP @ 35"
GUEST BATH	UPPER	BASE TOP @ 31"
LAUNDRY ROOM	UPPER TOP @ 84"	BASE

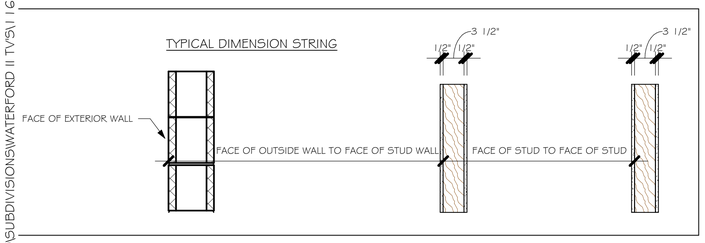

	BATHROOM NOTES
TB TOWEL BAR	ALL TUB DECKS @ 21" A.F.F
TP TOILET PAPER	ALL BLOCKING TO BE PT IN SHOWERS

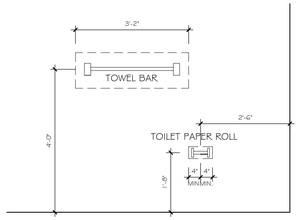

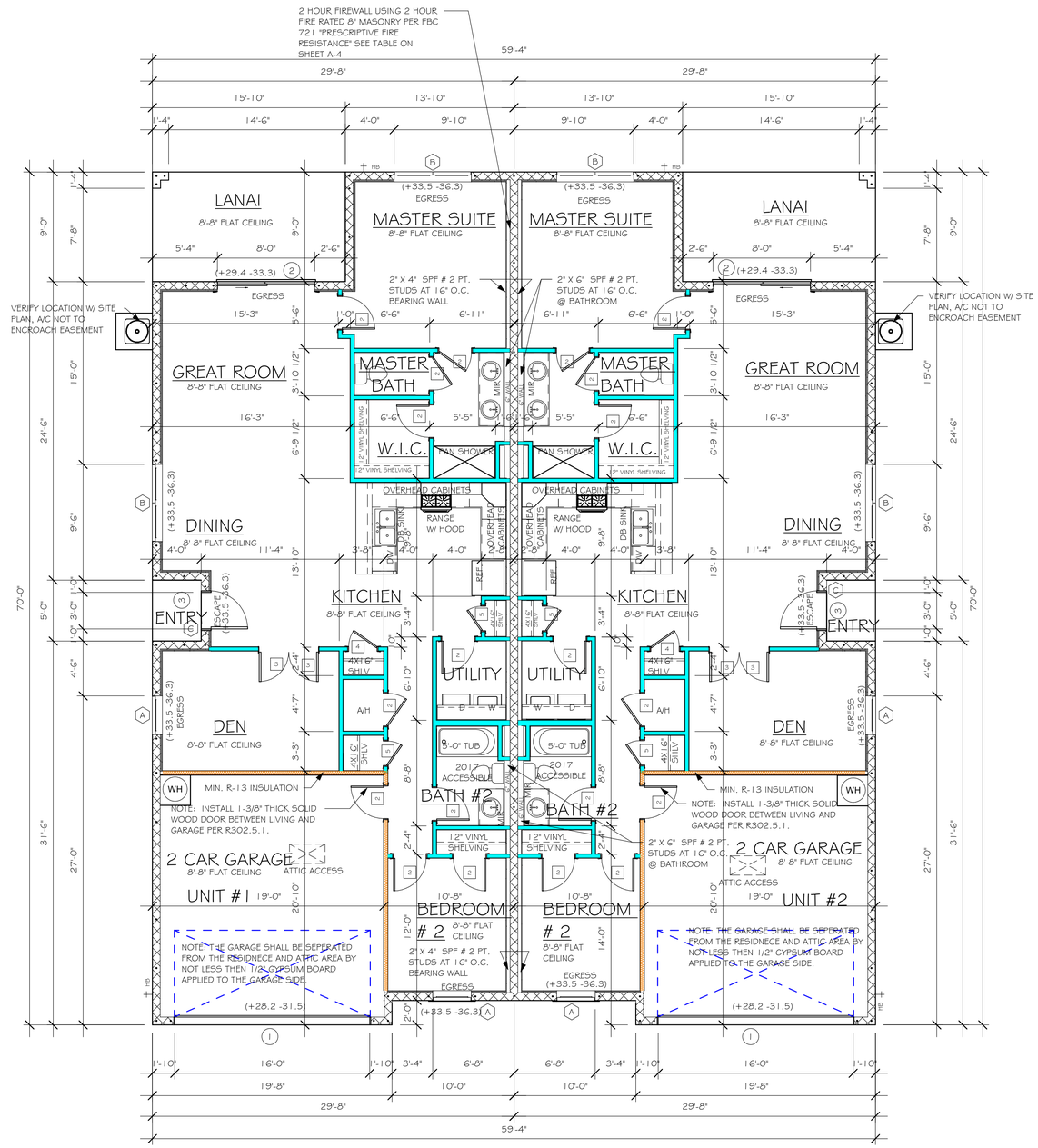

FLOOR PLAN
3/16" = 1'-0"

DESIGN IN ACCORDANCE WITH THE RESIDENTIAL FLORIDA BUILDING CODE 2017 - 6TH EDITION

D·R·HORTON® America's Builder

Gulf Coast Drafting & Design, Inc.
EMAIL: PLANS@GULFCOASTDRAFTING.COM
PHONE: 239-540-1822
1515 SE 47TH ST. CAPE CORAL, FL 33904

This signature and seal is for work performed by the Structural Engineer of Record (SER) and applies only to structural components of this plan. The SER is not responsible for other disciplines such as architectural, mechanical, plumbing, electrical, fire, life safety, accessibility, energy, use, occupancy, or any other code provisions.

STRUCTURAL SYSTEMS OF NORTH FLORIDA
1634 SE 47th ST SUITE #3
CAPE CORAL, FLORIDA
(239) 549-4554
CA# 8859

DEREK W. BERGENER LICENSE No. 58552 STATE OF FLORIDA PROFESSIONAL ENGINEER

LOT: 276-277
SUBDIVISION: WATERFORD II TVs
ADDRS: 7289-7281 WEST LENOX CIR.
D.R.H. #: 5791700 65-066

MODEL 1498
VILLA E
GCD JOB # 11612

DATE: 05/20/20
DRAWN BY: JSL
CHECKED BY: JWC
REVISED:
PLAN: FLOOR
SCALE: As indicated

A-3

L:\0-New Data\1-MASTER 2019\2019-BUILDERS\DR HORTON 2019\SUBDIVISIONS\WATERFORD II TVs\1612 LOT 276-277 1498 EREVIT\1612 1498 E.rvt

INSTALL META16 AT ALL TRUSSES TO 1450 lb UPLIFT. FOR HIGHER UPLIFTS, SEE NOTES ON PLAN.	TRUSS STRAPPING TO MASONRY		
	MAX TRUSS UPLIFT @ 24" OC (LBS)	CONNECTOR	FASTENER
	→ 1450	(1) META16 TO 40	9-10dx1-8", EMBED 4"
	1810	(1) HETA16 TO 40	10-10dx1-8", EMBED 4"
	2235	(2) HHETA16 TO 40	12-10dx1-8", EMBED 4"
	1985 (1 PLY)	(2) META12 TO 40	12-10dx1-8", EMBED 4"
	1900 (2 PLY)	(2) META12 TO 40	14-16d, EMBED 4"
	2500 (2 PLY)	(2) HETA12 TO 40	14-16d", EMBED 4"
	2500 (2PLY)	(2) HHETA12 TO 22	14-16d", EMBED 4"

NOTES:

1. PROVIDE A STRAP FROM THE ABOVE LIST AT EACH ROOF TRUSS BEARING POINT, BASED ON THE TRUSS UPLIFT VALUES IN THE SIGNED AND SEALED TRUSS DESIGN PACKAGE AND SUITABLE FOR THE GEOMETRY. EMBED STRAP ON -C OF WALL.
2. CONNECTORS ARE SIMPSON STRUCTURAL CONNECTORS. ALL CONNECTORS SHALL BE INSTALLED IN STRICT ACCORDANCE WITH SIMPSON PRINTED INSTUCTIONS. SUBSTITUTIONS MUST BE APPROVED IN WRITING BY THE ENGINEER OF RECORD.
3. WHERE EMBEDDED STRAPS ARE MISSING, OR MIS-LOCATED, INSTALL RETROFIT STRAP PER 10/S-3.

REV2

INSTALL AT ALL TRUSSES TO 840 lb UPLIFT. FOR HIGHER UPLIFTS, SEE NOTES ON PLAN.	TRUSS STRAPPING TO STUDWALL/ WOOD BEAM		
	MAX TRUSS UPLIFT @ 24" OC (LBS)	CONNECTOR	FASTENER
	→ 840	(1)MTS12 TO 20	14-10dx1-8"
	1680	(2) MTS12 TO 20	14-10dx1-8"
	2520	(3) MTS12 TO 20	14-10dx1-8"
	1450	(1) HTS20 TO 30	24-10dx1-8"
	2900	(2) HTS20 TO 30	24-10dx1-8"
	4350	(3) HTS20 TO 30	24-10dx1-8"
	5800	(4) HTS20 TO 30	24-10dx1-8"

NOTES:

1. PROVIDE A STRAP FROM THE ABOVE LIST AT EACH ROOF TRUSS BEARING POINT, BASED ON THE TRUSS UPLIFT VALUES IN THE SIGNED AND SEALED TRUSS DESIGN PACKAGE.
2. CONNECTORS ARE SIMPSON SRTONG TIE. ALL CONNECTORS SHALL BE INSTALLED IN STRICT ACCORDANCE WITH SIMPSON PRINTED INSTUCTIONS.

REV2

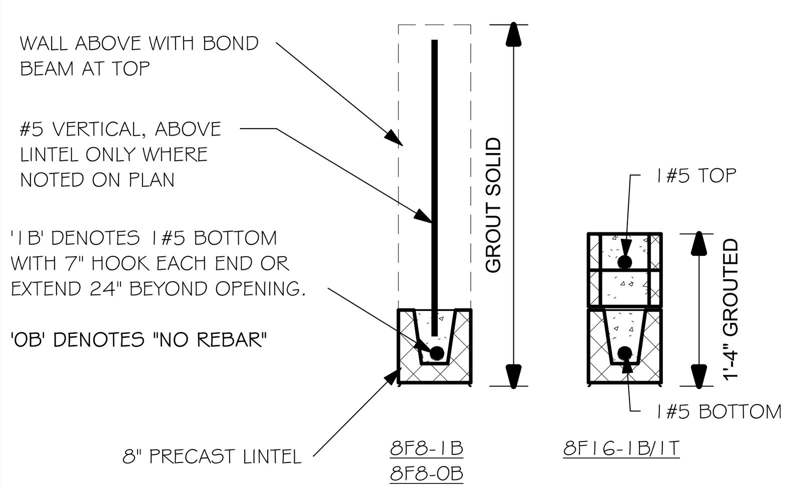

PRECAST LINTEL SCHEDULE

AT SWING DOORS, USE 2" RECESS STYLE LINTEL IF NEEDED FOR ROUGH OPENING.

LINTELS BEAR 4" MIN. EACH END

BEARING HEIGHT

= BEARING @ 8'-8"

TRUSS BEARING CONDITIONS AND STRAPPING BASED ON TRUSS LAYOUT PREPARED BY SCOSTA JOB# 44060 DATED: 08/27/17 REVISED: 12/03/19

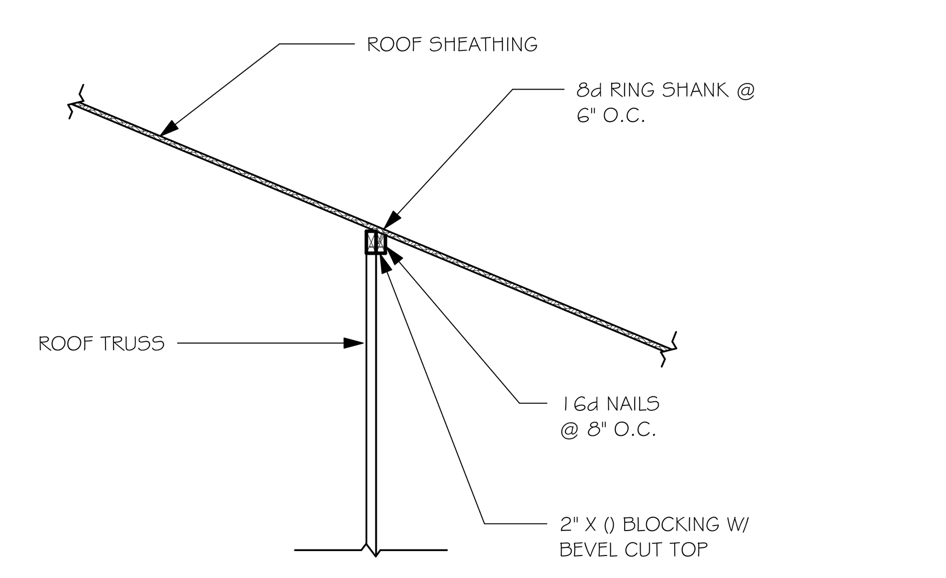

BEVELLED BLOCKING

1/2" = 1'-0"

MODEL 1498: ATTIC VENTILATION FBCR R806

COORDINATE VENTING REQUIREMENTS WITH ENERGY CALCULATIONS

			SOFFIT ONLY (1/150) (NO ROOF VENTS)		WITH ROOF VENTS (1/300) (R.V.)	
AREAS (SQ. FT.)			ATTIC VENTILATION REQUIRED (ATTIC AREA/150=14.55 SQ. FT.)		ATTIC VENTILATION REQUIRED (ATTIC AREA/300 =7.28 SQ. FT.)	
MARK	ATTIC	SOFFIT	REQ'D AIR FLOW OF SOFFIT	QUAD 4 SOFFIT HAS	QUANTITY OF ROOF VENTS	MIN AIR FLOW OF SOFFIT
1	2183.0 SQ. FT.	148.0 SQ. FT.	9.83%	8.15%	4	2.7%
			"SOFFIT ONLY" DOES NOT QUALIFY		ROOF VENTS ARE REQUIRED	
			SOFFIT MODEL ACM QUAD 4, FULL VENT, NARROW PATTERN, 8.15% FREE AIR FLOW		ROOF VENT MODEL 32" BASE 22-3/8" BASE LOMANCO 770-D 0.97 SQ. FT. FREE AIR	

FIRE RESISTANCE RATINGS - ANSI/UL 263 (BXUV)

Design No. U301	Bearing Wall Rating 2 HR.	Finish Rating 66 Min.

1. **Nailheads** - Exposed or covered with joint finisher.
2. **Joints** - Exposed or covered with fiber tape and joint finisher. As an alternate, nominal 3/32 in. thick gypsum veneer plaster may be applied to the entire surface of Classified veneer baseboard. Joints reinforced.
3. **Nails** - 6d cement coated nails 1-7/8 in. long, 0.0915 in. shank diam, 1/4 in. diam heads, and 8d cement coated nails 2-3/8 in. long, 0.113 in. shank diam, 9/32 in. diam heads.
4. **Gypsum Board** - * - 5/8 in. thick , two layers applied either horizontally or vertically. Inner layer attached to studs with the 1-7/8 in. nails spaced 6" o.c. Outer layer attached to studs over inner layer with the 2-3/8 in. long nails spaced 8" o.c. Vertical joints located over studs. All joints in face layers staggered with joints in base layers. Joints of each base layer offset with joints of base layer on opposite side.
When used in widths other than 48 in., gypsum board to be installed horizontally.
When Steel Framing Members* (Item 6) are used, base layer attached to furring channels with 1 in. long Type S bugle-head steel screws spaced max. 24 in. o.c.; face layer attached with 1-5/8 in. long Type S bugle-head steel screws spaced max. 12 in. o.c.
AMERICAN GYPSUM CO - Types AG-C, AGX-11, AGX-C.
BEIJING NEW BUILDING MATERIALS CO LTD - Type DBX-1.
CERTAINTEED GYPSUM, INC.- Types 1, FRPC, EGRG, ProRoc Type C or ProRoc Type X.
CERTAINTEED GYPSUM CANADA, INC. - ProRoc Type C, ProRoc Type X, ProRoc Type Abuse-Resistant.
CANADIAN GYPSUM COMPANY - Types AR, C, IP-AR, IP-X1, IP-X2, IPC-AR, SCX, SHX, WRC, WRX.
G-P GYPSUM CORP, SUB OF
GEORGIA-PACIFIC CORP - Types 5, 9, C, DAP, DD, DA, DGG, DS, GPFS6.
LAFARGE NORTH AMERICA INC - Types LGFC-C, LGFC2, LGFC2A, LGFC6, LGFC6A, LGFC-C/A.
NATIONAL GYPSUM CO - Types FSK, FSK-C, FSK-G, FSW, FSW-3, FSW-C, FSW-G.
PABCO GYPSUM, DIV OF
PACIFIC COAST BUILDING PRODUCTS INC - Types C, PG-2, PG-3, PG-3W, PG-4, PG-5, PG-5W, PG-5WS, PG-9 or PG-C.
TEMPLE-INLAND FOREST PRODUCTS CORP - Type TG-C.
SIAM GYPSUM INDUSTRY (SARABURI) CO LTD - Type EX-1.
STANDARD GYPSUM L L C - Types SGC, SG-C or SGC-G.
UNITED STATES GYPSUM CO - Types AR, C, FRX-G, IP-AR, IP-X1, IP-X2, IPC-AR, SCX, SHX, WRC, WRX.
USG MEXICO S A DE C V - Types AR, C, IP-AR, IP-X1, IP-X2, IPC-AR, SCX, SHX, WRC, WRX.

4A. **Gypsum Board*** - (As an alternate to Item 4) - Nom. 3/4 in. thick , installed as described in Item 4.
CANADIAN GYPSUM COMPANY - Types AR, IP-AR.
UNITED STATES GYPSUM CO - Types AR, IP-AR.
USG MEXICO S A DEV C V - Types AR, IP-AR.

4B. **Gypsum Board*** - (As an alternate to Items 4 and 4A) - 5/8 in. thick , 2 ft. wide, tongue and groove edge, applied horizontally as the outer layer to one side of the assembly. Secured as described in Item 4. Joint covering (Item 2) not required.
CANADIAN GYPSUM COMPANY - Types SHX.
UNITED STATES GYPSUM CO - Types SHX.
USG MEXICO S A DEV C V - Types SHX.

5. **Molded Plastic*** - Not shown, Optional - Solid vinyl siding mechanically secured over the outer layer to framing members in accordance with manufacturer's recommended installation details.
ASSOCIATED MATERIALS INC
ALSIDE, DIV OF
GENTEK BUILDING PRODUCTS LTD
HEARTLAND BUILDING PRODUCTS INC
VYTEC CORP
NEBRASKA PLASTICS INC
6. **Steel Framing Members** - (Optional, Not shown)* - Furring channels and resilient sound isolation clip as described below:
A. **Furring Channels** - Formed of No. 25 MSG galv. steel. 2-3/8 in. wide by 7/8 in. deep, spaced 24 in. o.c. perpendicular to studs. Channels secured to studs as described in Item B. Ends of adjoining channels are overlapped 6 in. and tied together with double strand of No. 18 SWG galv. steel wire near each end of overlap. As an alternate, ends of adjoining channels may be overlapped 6 in. and secured together with two self-tapping #6 framing screws, min. 7/16 in. long at the midpoint of the overlap, with one screw on each flange of the channel. Wallboard attached to furring channels as described in Item 4.
B. **Steel Framing Members*** - Resilient sound isolation clip used to attach furring channels (Item 6A) to studs. Clips spaced 48 in. o.c. and secured to studs with No. 8 x 2-1/2 in. coarse drywall screw through the center grommet. Furring channels are friction fitted into clips.
PAC INTERNATIONAL INC - Type RSIC-1.

*Bearing the UL Classification Mark

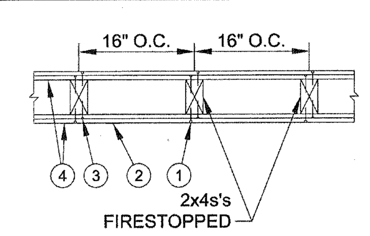

PLAN NOTES:

1. ROOF TRUSS BEARING ELEVATION VARIES, SEE LEGEND.
2. ROOF FRAMING SHALL BE WOOD TRUSSES DESIGNED BY A DELEGATED TRUSS ENGINEER PER DESIGN CRITERIA ON SHEET S-1.
3. PROVIDE STRAPPING AT TRUSSES PER NOTES ON THIS SHEET.
4. FOR NAILING OF ROOF DECK, SEE 1 AND 2 ON S-1.
5. [8F8-1B] etc., DENOTES PRECAST LINTEL ABOVE DOOR/WINDOW OPENING PER SCHEDULE THIS SHEET.
6. AT TRUSS BEARING, PROVIDE 8x8 MASONRY BOND BEAM W/ 1 #5 CONTINUOUS, SEE DETAIL 11/S-1.

2 HOUR FIREWALL USING 8" MASONRY PER FBC 721 "PRESCRIPTIVE FIRE RESISTANCE"

F.B.C. TABLE 722.3.2

MINIMUM EQUIVALENT THICKNESS[1] (IN) BEARING OR NON-BEARING CONCRETE MASONRY WALLS

TYPE OF AGGREGATE	FIRE - RESISTANCE RATING (HOURS)				
			2	HR	
1. PUMICE OR EXPANDED SLAG			3.2"		
2. EXPANDED SHALE, CLAY OR SLATE			3.6"		
3. LIMESTONE, CINDERS, OR UNEXPANDED SLAG			4.0"		
4. CALCAREOUS OR SILICEOUS GRAVEL			4.2"		

FOR THE 2 HOUR FIREWALL, PURCHASE ONLY BLOCK WITH 2 HOUR FIRE RATED MARKING, LABEL OR DOCUMENTATION.

L:\0-New Data\1-MASTER 2019\2019-BUILDERS\DR HORTON 2019\SUBDIVISIONS\WATERFORD II TVS\11612 LOT 276-277 1498 E\REVIT\11612 1498 E.rvt

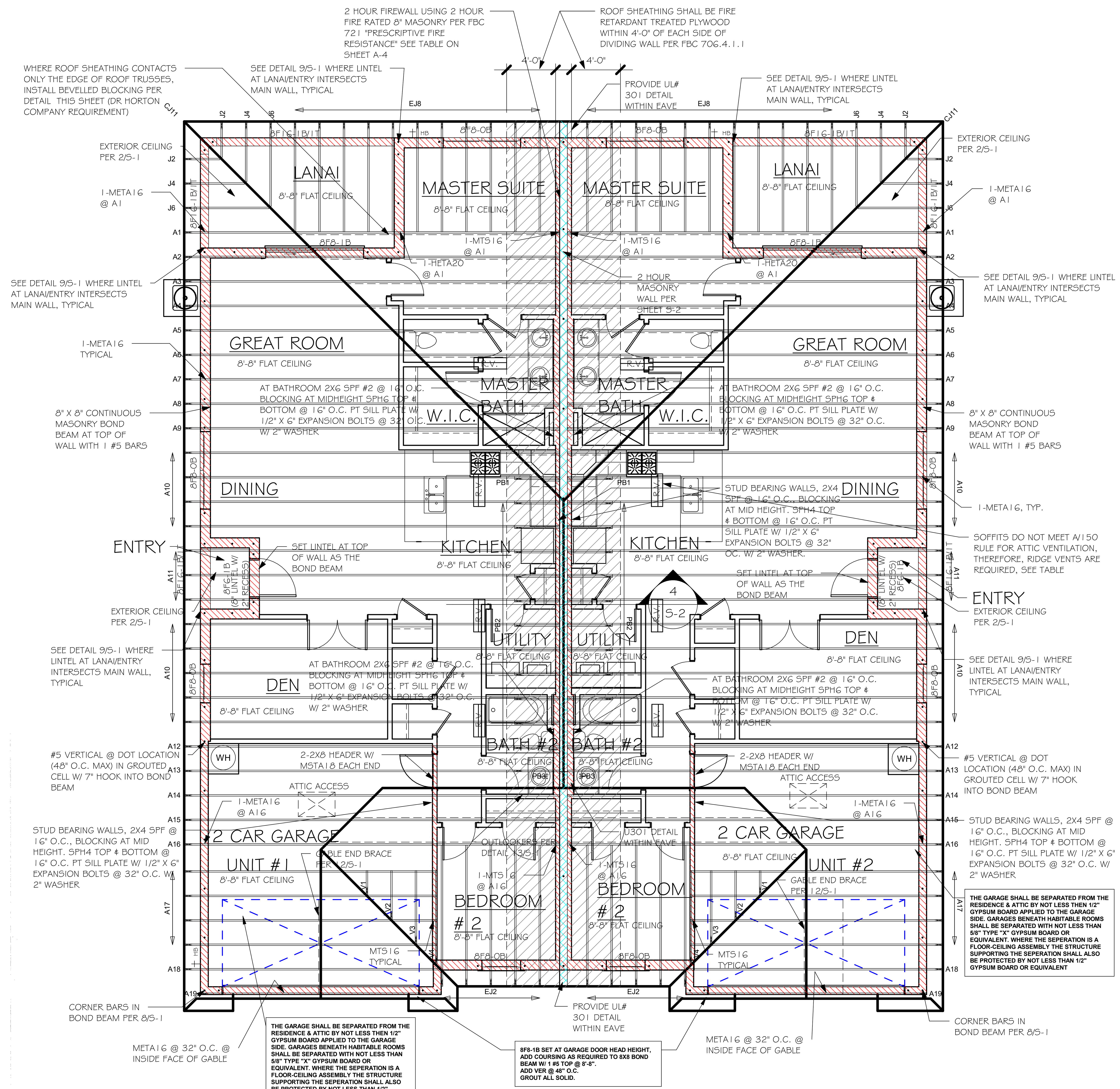

ROOF PLAN

3/16" = 1'-0"

DESIGN IN ACCORDANCE WITH THE RESIDENTIAL FLORIDA BUILDING CODE 2017 - 6TH EDITION

D·R·HORTON® America's Builder DHI Listed NYSE

Gulf Coast Drafting & Design, Inc.
EMAIL: PLANS@GULFCOASTDRAFTING.COM
PHONE: 239-540-1822
1515 SE 47TH ST. CAPE CORAL, FL 33904

This signature and seal is for work performed by the Structural Engineer of Record (SER) related to Structural Engineering only. No work was performed by the SER in other disciplines such as architectural, mechanical, plumbing, electrical, fire, life safety, accessibility, energy, site work, civil, or geotechnical.
STRUCTURAL ENGINEERING
STRUCTURAL SYSTEMS OF NORTH FLORIDA
1634 S.E. 47th ST SUITE #3
CAPE CORAL, FL 33904
(239) 549-4554
CA# 8829

DEREK W. BERGENER LICENSE No. 58552 STATE OF FLORIDA PROFESSIONAL ENGINEER

LOT: 276-277
SUBDIVISION: WATERFORD II TVs
ADDRS: 7289-7281 WEST LENOX CIR.
D.R.H. #: 579170065-066

MODEL 1498
VILLA E

GCD JOB # 11612

DATE:	05/20/20
DRAWN BY:	JSL
CHECKED BY:	JWC
REVISED:	
PLAN:	ROOF
SCALE:	As indicated

A-4

ELECTRICAL LEGEND

	ELECTRICAL METER
	ELECTRICAL PANEL
	120 V JUNCTION BOX
	SINGLE RECEPTACLE OUTLET
	220 V RECEPTACLE OUTLET
	4-PLEX RECEPTACLE OUTLET
	DUPLEX RECEPTACLE OUTLET
	1/2 SWITCHED DUPLEX OUTLET
WP	DUPLEX RECEPTACLE AT ELEV. A.F.F.
	DUPLEX RECEPTACLE - ABOVE COUNTER
	SINGLE POLE SWITCH
3	3 WAY SWITCH
D	DIMMER SWITCH
MS	MOTION SENSOR SWITCH
SD SCD	AC/DC SMOKE DETECTOR TO BE INTERCONNECTED ANY RESIDENT HAVING A FOSSIL-BURNING HEATER OR APPLIANCE, A FIREPLACE, OR AN ATTACHED GARAGE SHALL HAVE AN OPERATIONAL CARBON MONOXIDE ALARM INSTALLED WITHIN 10 FEET OF EACH ROOM USED FOR SLEEPING PERPOSES. PER RULE 9B-3.04.72 SD (SMOKE DETECTOR) SCD (CARBON MONOXIDE/ SMOKE DETECTOR)
T	TELEPHONE OUTLET
TV	TELEVISION RECEPTION OUTLET
	SURFACE MOUNTED CEILING LIGHT
	FLUSH MOUNTED LIGHT
	WALL MTD. BRACKET LIGHT
	DUPLEX FLOOD LIGHT
	EXHAUST FAN
	TRACK MTD. LIGHTS
	A/C DISCONNECT
	PUSH BUTTON (PB) / DOOR BELL (DB)
IC	INTERCOM
KP	KEYPAD
	4' FLUORESCENT LIGHT
	2' UNDER COUNTER LIGHT

NOTE: NOT ALL SYMBOLS ARE USED FOR THIS PROJECT.

ELECTRICAL NOTES:

ARC-FAULT CIRCUIT-INTERRUPTERS AND TAMPER RESISTANT RECEPTACLES SHALL BE INSTALLED IN DWELLING UNITS PER N.E.C 210.12 AND 406.11

ALL ELECTRIC, ELECTRICAL EQUIPMENT AND APPLIANCES TO BE SET AT OR ABOVE BASE FLOOD ELEVATIONS PLUS 1'-0" FREEBOARD.
ALL OUTLETS IN WET AREAS AND ALL EXTERIOR OUTLETS TO BE GFI'S.

INSTALL PHONE AND T.V PER CONTRACT.

INSTALL ALL ELECTRICAL PER NEC 2014

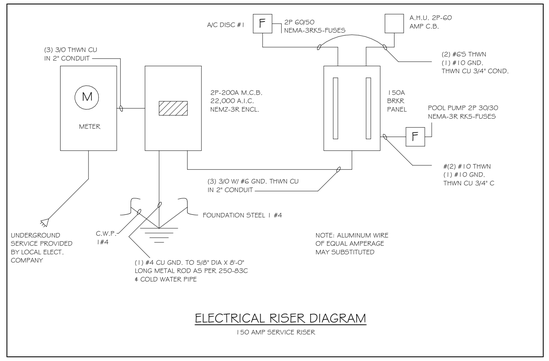

ELECTRICAL RISER DIAGRAM

150 AMP SERVICE RISER

AIR CONDITIONING COORDINATION REQUIRED.
PRIOR TO ORDERING ROOF TRUSSES, THE CONTRACTOR SHALL WORK WITH THE AIR CONDITIONING SUB CONTRACTOR TO DESIGN/PLAN AND LAYOUT THE LOCATION OF AIR HANDLING EQUIPMENT, AIR DUCT SIZE AND LOCATION AND COORDINATE THAT DESIGN WITH THE TRUSSES FOR SPACE, CONNECTIVITY, AND POSITION REQUIREMENTS. THE CONTRACTOR MUST ADVISE THE TRUSS COMPANY PRIOR TO ANY CONSTRUCTION OF TRUSSES OF THE AIR CONDITIONING/HANDLING EQUIPMENTS SIZES AND WEIGHT AND DUCT LAYOUT CONCERNS OR REQUIREMENTS THAT MAY HAVE THE POTENTIAL TO CHANGE OR MODIFY THE TRUSSES TO ACCOMODATE THE SAME.
THE CONTRACTOR SHALL COORDINATE CONDENSATION DISCHARGE LINE LOCATION, AND ELECTRICAL SERVICE TO AIR EQUIPMENT, AND PROVIDE ANY LOCAL DISCONNECTS, LIGHTS AND SERVICE PLATFORMS THAT MAY BE REQUIRED.

ELECTRICAL NOTES FOR FIRE RATED WALLS

ELECTRICAL OUTLETS PLACED IN FIRE RATED WALLS SHALL BE IN CONFORMANCE WITH THE UNDERWRITERS LABORATORIES, INC., FIRE RESISTANCE DIRECTORY, CURRENT EDITION. THESE REQUIREMENTS INCLUDE, BUT ARE NOT LIMITED TO, THE FOLLOWING SPECIFIC ITEMS:

A) INDIVIDUAL OUTLET/SWITCH BOXES SHALL OT EXCEED (16) SQUARE INCHES IN AREA.

B) AGGREGATE AREA OF OUTLET/SWITCH BOXES SHALL NOT EXCEED (100) SQUARE INCHES WITHIN (100) SUARE FEET OF WALL AREA.

C) OUTLET/SWITCH BOXES LOCATED ON OPPOSITE SIDE OF THE SAME WALL SHALL BE SEPERATED BY A MINIMUM OF (24) INCHES.

D) ALL OUTLET/SWITCH BOXES SHALL BE SECURELY ATTACHED TO THE STUDS AND THE OPENING IN THE WALL BOARD FACING SHALL BE CUT SO THAT THE CLEARANCE BETWEEN THE BOX AND THE WALLBOARD DOES NOT EXCEED 1/8 INCH.

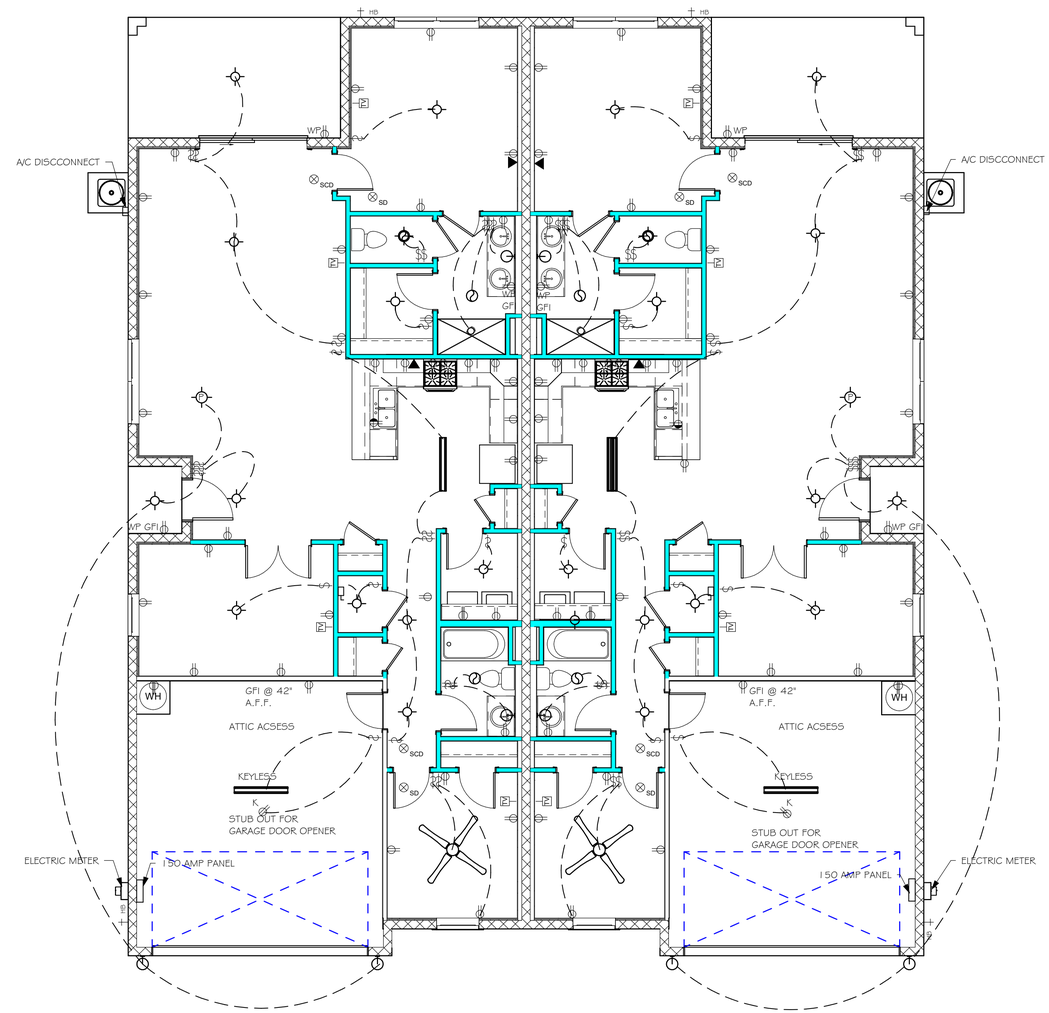

ELECTRCAL PLAN

3/16" = 1'-0"

DESIGN IN ACCORDANCE WITH THE RESIDENTIAL FLORIDA BUILDING CODE 2017 - 6TH EDITION

D·R·HORTON® America's Builder

Gulf Coast Drafting & Design, Inc.
EMAIL: PLANS@GULFCOASTDRAFTING.COM
PHONE: 239-540-1822
1515 SE 47TH ST. CAPE CORAL, FL 33904

LOT: 276-277
SUBDIVISION: WATERFORD II TVs
ADDRS: 7289-7281 WEST LENOX CIR.
D.R.H. #: 5791700065-066

MODEL 1498
VILLA E

GCD JOB # 11612

DATE: 05/20/20
DRAWN BY: JSL
CHECKED BY: JWC
REVISED:
PLAN: ELECTRICAL
SCALE: As indicated

A-5

L:\0-New Data\1-MASTER 2019\2019-BUILDERS\DR HORTON 2019\SUBDIVISIONS\WATERFORD II TVS\11612 LOT 276-277 1498 E\REVIT\11612 1498 E.rvt

1

RESIDENTIAL SPECIFICATIONS

GENERAL NOTES

1. THE CONTRACTOR SHALL VERIFY ALL CONDITIONS AND DIMENSIONS AT THE JOB SITE PRIOR TO COMMENCING WORK. THE CONTRACTOR SHALL REPORT ALL DISCREPENCIES BETWEEN THE DRAWINGS AND EXISTING CONDITIONS TO THE DESIGNER PRIOR TO COMMENCING WORK.

2. THE CONTRACTOR SHALL SUPPLY, LOCATE AND BUILD INTO THE WORK ALL INSERTS, ANCHORS, ANGLES, PLATES, OPENINGS, SLEEVES, HANGERS, SLAB DEPRESSIONS AND PITCHES AS MAY BE REQUIRED TO ATTACH AND ACCOMMODATE OTHER WORK.

3. ALL DETAILS AND SECTIONS SHOWN ON THE DRAWINGS ARE INTENDED TO BE TYPICAL AND SHALL BE CONSTRUCTED TO APPLY TO ANY SIMILAR SITUATION ELSEWHERE IN THE WORK EXCEPT WHERE A DIFFERENT DETAIL IS SHOWN.

4. SUBSURFACE SOIL CONDITION INFORMATION IS NOT AVAILABLE FOUNDATIONS ARE DESIGNED FOR A SOIL BEARING CAPACITY OF 2,000 PSF. THE CONTRACTOR SHALL REPORT ANY DIFFERING CONDITIONS TO THE DESIGNER PRIOR TO COMMENCING WORK.

5. STRUCTURAL DRAWINGS SHALL BE USED IN CONJUCTION WITH JOB SPECIFICATION AND HOUSE PLANS, MECHANICAL, ELECTRICAL, PLUMBING, AND SITE DRAWINGS, CONSULT THESE DRAWINGS FOR SLEEVES, DEPRESSIONS AND OTHER DETAILS NOT SHOWN ON STRUCTURAL DRAWINGS.

6. ALL SPECIFIED FASTENERS MAY ONLY BE SUBSTITUTED IF APPROVED BY THE ENGINEER IN WRITING, THE INSTALLATION OF THE FASTENERS SHALL BE IN ACCORDANCE WITH THE MANUFACTURER'S SPECIFICATIONS. USP FASTENERS SPECIFIED MAY BE SUBSTITUTED WITH THE SAME QUANTITY AND EQUIVALENT STRENGTH PRODUCT.

7. TREATED WOOD REQUIREMENTS:-
ALL WOOD EXPOSED TO WEATHER SHALL BE PROTECTED, PRESSURE TREATED, OR NATURALLY RESISTANT TO DECAY.
ALL WOOD TOUCHING MASONRY OR CONCRETE SHALL BE ISOLATED, OR PRESSURE TREATED.

8. THE STRUCTURE IS DESIGNED TO BE SELF SUPPORTING AND STABLE AFTER THE BUILDING IS COMPLETE. IT IS THE CONTRACTOR'S SOLE RESPONSIBILTY TO DETERMINE ERECTION PROCEDURES AND SEQUENCES TO ENSURE SAFETY OF THE BUILDING AND ITS COMPONENTS DURING ERECTION. THIS INCLUDES THE NECESSARY SHORING, SHEETING, TEMPORARY BRACING, GUYS, OR TIE DOWNS.

9. CEILING DRYWALL INSTALLED WITHIN THE HOUSE TO TRUSSES SPACED 24" O.C. SHALL BE 5/8" DRYWALL OR 1/2" SAG RESISTANT PER SEC. 702.3.5

10. LANAI CEILINGS & COVERED ENTRY CEILINGS
1X4 STRIPPING @ 16" O.C. FASTENED WITH 2-8d NAILS TO EACH TRUSS. 5/8" EXTERIOR GYP. BOARD CEILING FASTENED WITH 8d NAILS OR 1-5/8" DRYWALL SCREWS @ 6" O.C. EDGE AND FIELD.

2

GENERAL ROOF ASSEMBLY

ROOF SHEATHING
SHALL BE APA RATED SHEATHING, EXPOSURE 1, SPAN RATING 24/16 OR BETTER. INSTALL PANELS WITH LONG DIMENSION PLACED PERPENDICULAR TO TRUSSES. A 1/8" SPACE BETWEEN ADJACENT SHEETS SHALL BE MAINTAINED . INSTALL "H" CLIPS AT UNSUPPORTED PANEL EDGES. THE ROOF SHEATHING SHALL BE NAILED WITH 8d RING SHANK NAILS @ 6" O.C. EDGE AND 6" O.C. FIELD. ENSURE THAT ALL NAILS PENETRATE THE TOP CHORD OF THE TRUSSES WITHOUT SPLITTING. RING SHANK NAILS PER R803.2.3.1 - 0.113" NOMINAL SHANK DIAMETER, RING DIAMETER OF 0.012" OVER SHANK DIAMETER, 16 TO 20 RINGS PER INCH, 0.280" DIAMETER FULL ROUND HEAD, 2" NAIL LENGTH.

FLASHING
FLASHING SHALL BE ALUMINUM, ALUMINUM ZINC COATED STEEL 0.0179" THICK, 26 GAUGE AZ50 ALUM ZINC, OR GALVANIZED STEEL 0.0179" THICK, 26 GAUGE ZINC COATED G90. FLASHING SHALL BE INSTALLED IN ACCORDANCE WITH THE ZIP SYSTEM ROOF SHEATHING MANUFACTURES PUBLISHED REQUIREMENTS. ALL FLASHING AND INSTALLATION SHALL CONFORM TO SECTION R905.2.8 (1 TO 5).

DRIP EDGE
DRIP EDGE SHALL BE PROVIDED AT ALL EAVES AND GABLES OF SHINGLES ROOFS, LAPPED A MINIMUM OF 3" @ JOINTS. THE OUTSIDE EDGE SHALL EXTEND A MINIMUM OF 1/2" BELOW SHEATHING AND THE INSIDE EDGE SHALL EXTEND BACK A MINMUM OF 2". DRIP EDGE SHALL BE FASTENED AT NO MORE THAN 4" CENTERS. THERE SHALL BE A MINIMUM OF 4" WIDTH OF ROOF CEMENT INSTALLED OVER THE DRIP EDGE FLANGE.

3

ASPHALT SHINGLE ROOF SPEC'S

SHINGLES
15# FELT SHALL BE INSTALLED UNDER ASPHALT SHINGLES. ALL ASPHALT SHINGLES SHALL HAVE SELD-SEALING STRIPS OR BE INTERLOCKING AND COMPLY WITH ASTM D 225 OR D 3462, AND SHALL BE SECURED TO THE ROOF WITH NO LESS THAN 6 FASTENERS PER SHINGLE STRIP, OR A MINIMUM OF 2 FASTENERS PER SHNGLE TAB, AND SHALL IN NO CASSE BE FASTENED WITH LESS FASTENERS THAN THAT REQUIRED BY THE MANUFACTURE. INSTALLATION SHALL COMPLY WITH MANUFACTURES REQUIREMENTS FOR INSTALLATION IN THE GIVEN FLORIDA WIND ZONE, AS DETERMINED BY ASTM D 3161.

FASTENERS
FASTENERS FOR ASPHALT SHINGLES SHALL COMPLY WITH ASTM F 1667, AND SHALL BE MADE WITH GALVANIZED STEEL, STAINLESS STEEL OR ALUMINUM WITH A MINIMUM SHANK SIZE OF 12 GAUGE (0.105") WITH A MINIMUM 3/8" DIAMETER HEAD SHANK AND SHALL BE A LENGTH TO PENTRATE THE SHEATHING

THE NAIL COMPONENT OF PLASTIC CAP NAILS SHALL MEET OR EXCEED THE REQUIREMENTS OF ASTM A 641, CLASS 1, OR EQUAL, AND SHALL BE CORROSION RESTITANT BY ELECTRO GALVANIZATION, MECHANICAL GALVANIZATION, HOT DIPPED GALVANIZATION OR SHALL BE MADE OF STAINLESS STEEL, NON-FERROUS METAL

4

CLAY AND CONCRETE ROOF TILE SPECS

INSTALL PEEL AND STICK UNDERLAYMENT APPROVED FOR SINGLE LAYER APPLICATION UNDER TILE ROOF.
THE INSTALLATION OF CLAY AND CONCRETE TILE SHALL COMPLY WITH THE PROVISIONS OF R905.3 F.B.C.
MARKING: EACH ROOF TILE SHALL HAVE A PERMANENT MANUFACTURER'S IDENTIFICATION MARK.
APPLICATION SPECIFICATIONS: THE TILE MANUFACTURER'S WRITTEN APPLICATION SPECIFICATIONS SHALL BE AVAILABLE AND SHALL INCLUDED BUT NOT BE LIMITED TO THE FOLLLOWING:
1. TILE PLACEMENT AND SPACING,
2. ATTACHMENT SYSTEM NECESSARY TO COMPLY WITH CURRENT WIND CODE,
A. AMOUNT AND PLACEMENT OF MORTAR
B. AMOUNT AND PLACEMENT OF ADHESIVE
C. TYPE, NUMBER, SIZE AND LENGTH OF FASTENERS AND CLIPS.
3. UNDERLAYMENT
4. SLOPE REQUIREMENT.

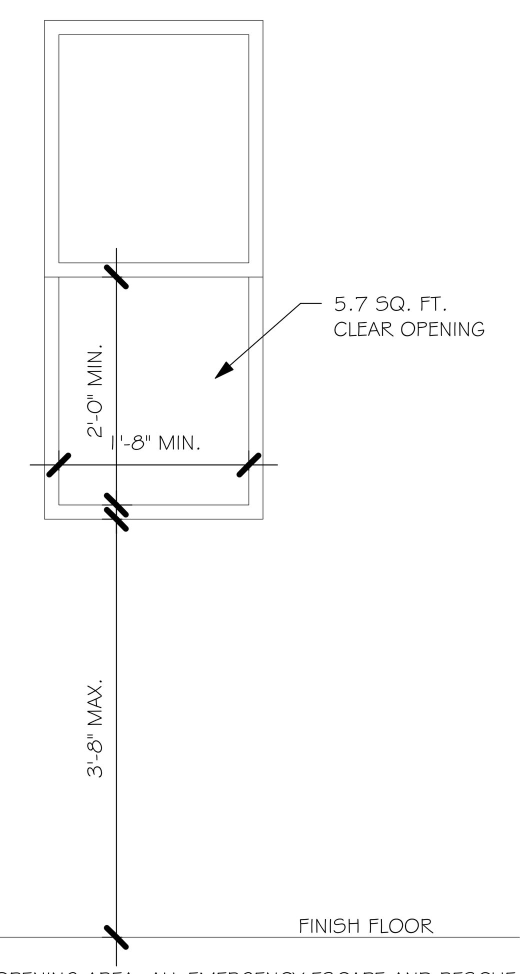

R310.2.1 MINMUM OPENING AREA- ALL EMERGENCY ESCAPE AND RESCUE OPENINGS SHALL HAVE A MINIMUM NET CLEAR OPENING OF 5.7 SQUARE FEET (0.530 m^2).

EXCEPTION- GRADE FLOOR OPENINGS SHALL HAVE A MINIMUM NET CLEAR OPENING OF 5 SQUARE FEET (0.465 m^2).

R310.2.1 MINMUM OPENING HEIGHT- THE MINIMUM NET CLEAR OPENING HEIGHT SHALL BE 24 INCHES (610mm).

R310.2.1 MINMUM OPENING WIDTH- THE MINIMUM NET CLEAR OPENING WIDTH SHALL BE 20 INCHES (508mm).

R310.1.1 OPERATIONAL CONSTRAINTS- EMERGENCY ESCAPE AND RESCUE OPENINGS SHALL BE OPERATIONAL FROM THE INSIDE OF THE ROOM WITHOUT THE USE OF KEYS OR TOOLS.

R310.2.3 WINDOW WELLS- THE MINIMUM HORIZONTAL AREA OF THE WINDOW WELL SHALL BE 9 SQUARE FEET (0.84 m^2), WITH A MINIMUM HORIZONTAL PROJECTION AND WIDTH OF 36 INCHES (914mm). THE AREA OF THE WINDOW WELL SHALL ALLOW THE EMERGENCY ESCAPE AND RESCUE OPENING TO BE FULLY OPENED.

MINIMUM EGRESS WINDOW DETAIL

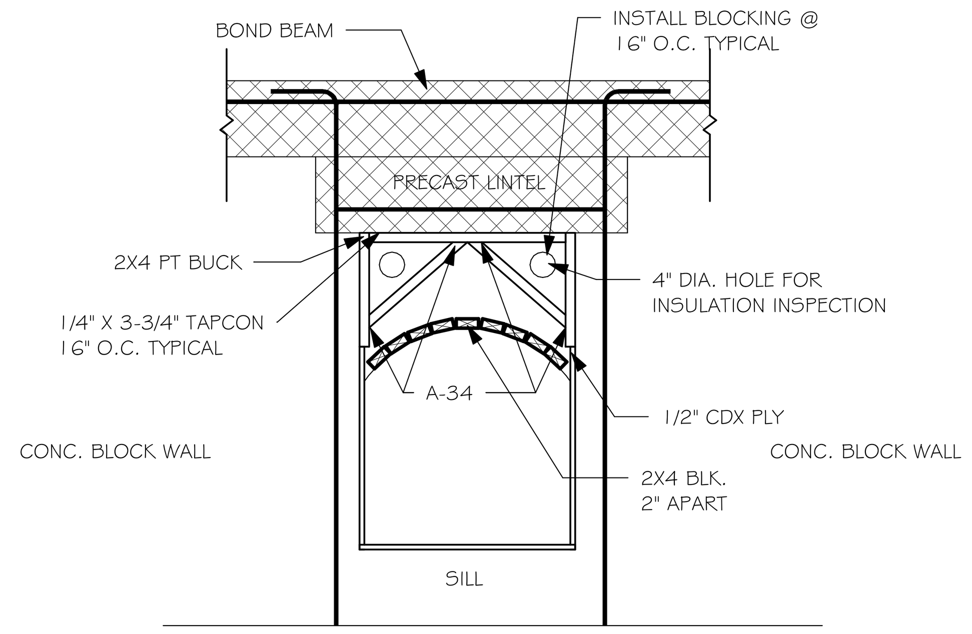

WINDOW OR DOOR ARCH SPACE FRAMING ABOVE

SPECIAL NOTE:
FRAMING OF DECORATIVE ARCHES AT WINDOW AND DOOR OPENINGS SHALL COMPLY WITH THE FOLLOWING:

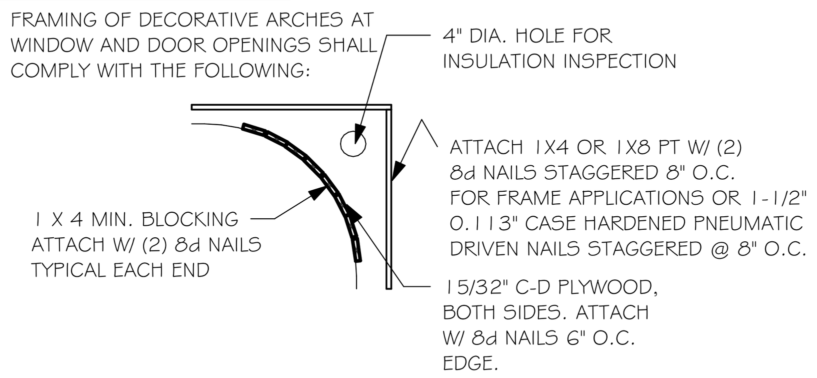

FILL IN FRAMING

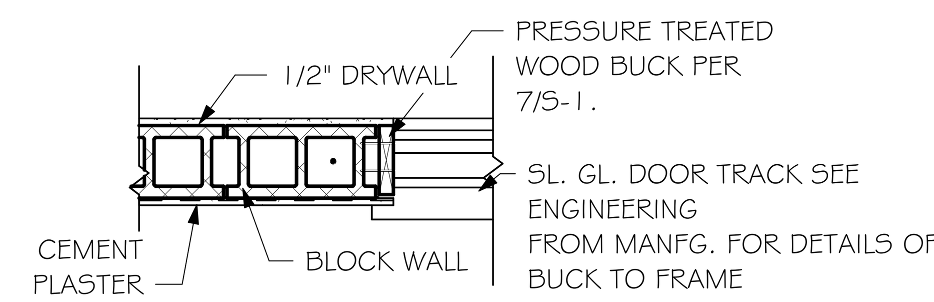

SL. GL. DR. JAM TO BLOCK DETAIL

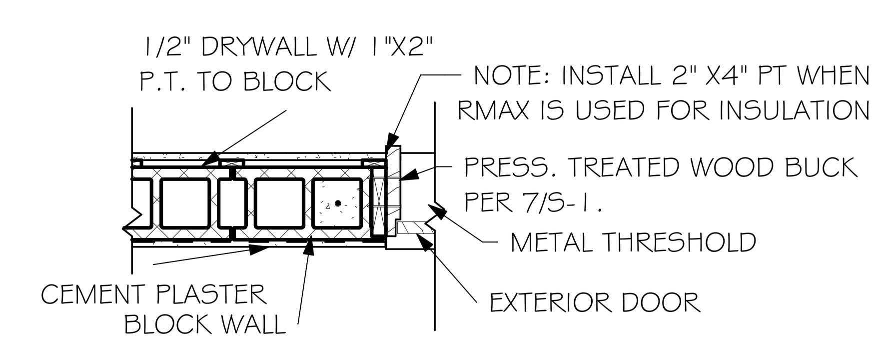

DOOR JAM TO BLOCK DETAIL

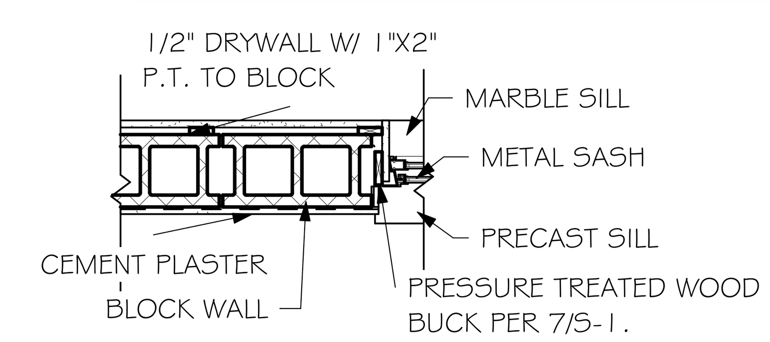

WINDOW JAM TO BLOCK DETAIL

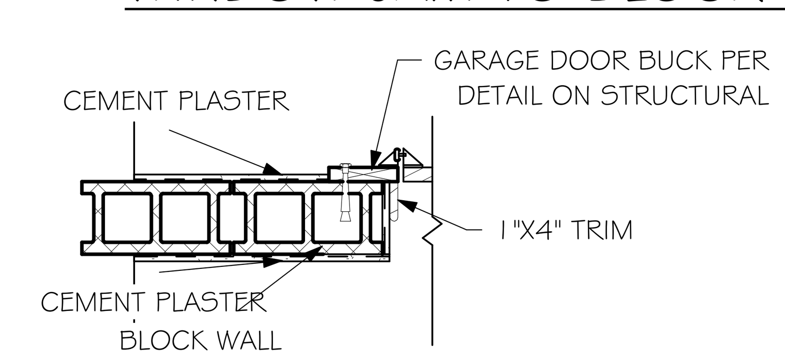

GARAGE DOOR JAM DETAIL

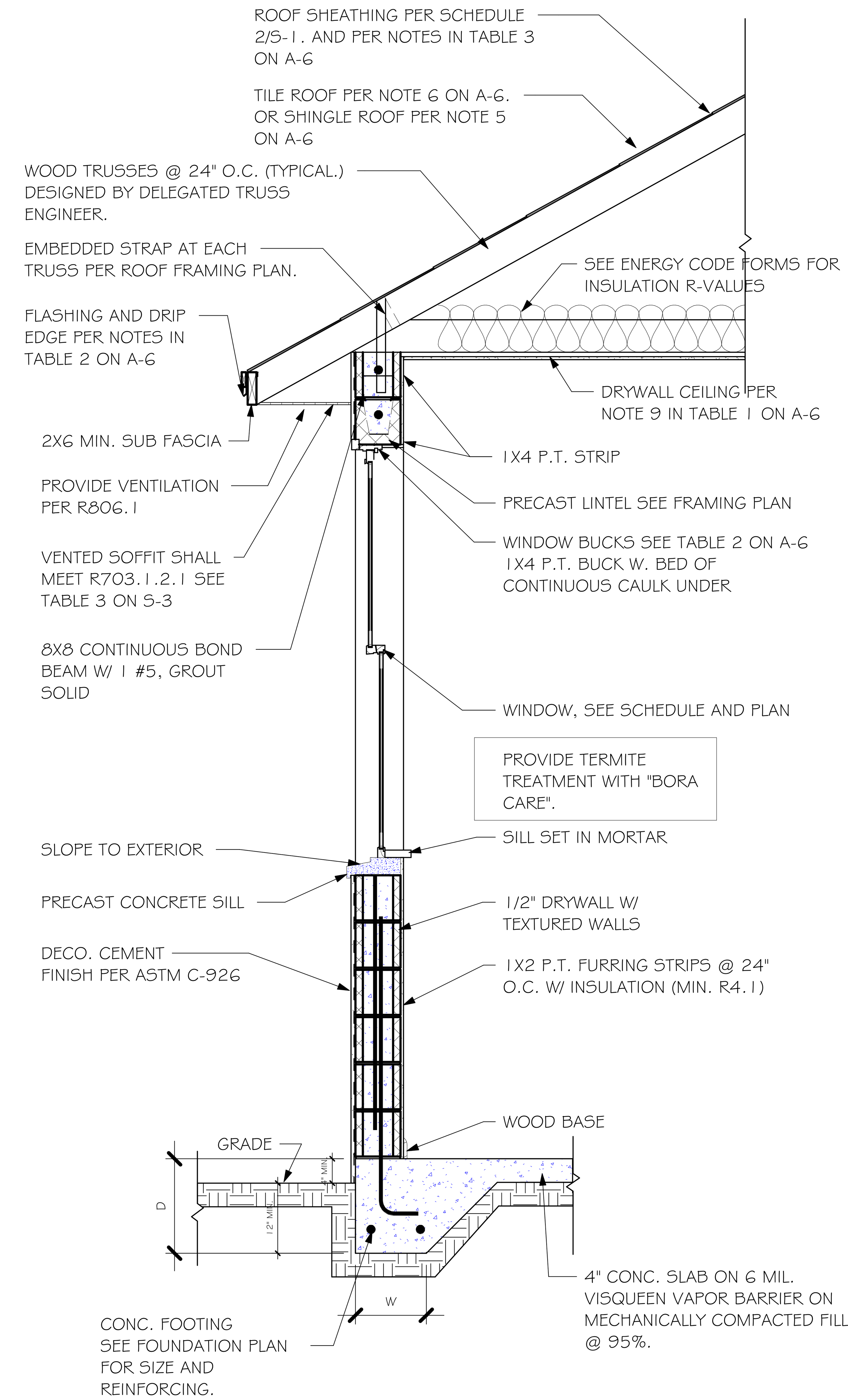

TYPICAL WALL SECTION

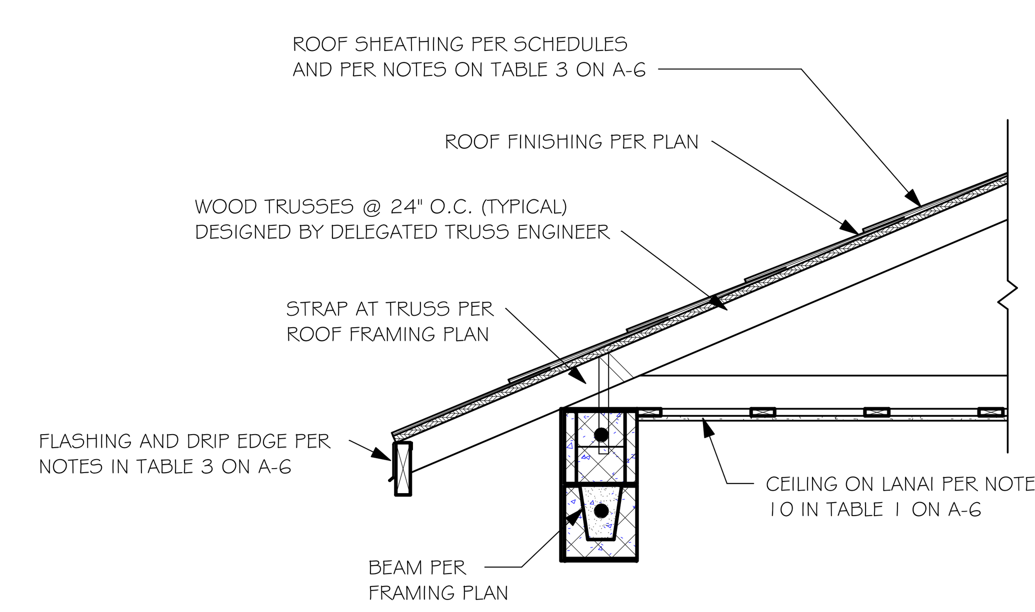

LANAI/ ENTRY ROOF ASSEMBLY
3/4" = 1'-0"

DESIGN IN ACCORDANCE WITH THE RESIDENTIAL FLORIDA BUILDING CODE 2017 - 6TH EDITION

D·R·HORTON® America's Builder DHI Listed NYSE

Gulf Coast Drafting & Design, Inc.
EMAIL: PLANS@GULFCOASTDRAFTING.COM
PHONE: 239-540-1822
1515 SE 47TH ST. CAPE CORAL, FL 33904

This signature and seal is for work performed by the Structural Engineer of Record (SER) related to Structural Engineering only. No work was performed by the SER in other disciplines such as architectural, mechanical, plumbing, electrical, fire, life safety, accessibility, energy, site work, civil, or geotechnical.

STRUCTURAL ENGINEERING
STRUCTURAL SYSTEMS OF NORTH FLORIDA
1634 S.E. 47th ST SUITE #3
CAPE CORAL, FL 33904
(239) 549-4554
CA# 8829

DEREK W. BERGENER LICENSE No. 58552 STATE OF FLORIDA PROFESSIONAL ENGINEER

LOT: 276-277
SUBDIVISION: WATERFORD II TVs
ADDRS: 7289-7281 WEST LENOX CIR.
D.R.H. #: 579170065-066

MODEL 1498
VILLA E
GCD JOB # 11612

DATE:	05/20/20
DRAWN BY:	JSL
CHECKED BY:	JWC
REVISED:	
PLAN:	SECTIONS
SCALE:	As indicated

A-6

L:\0-New Data\1-MASTER 2019\2019-BUILDERS\DR HORTON 2019\SUBDIVISIONS\WATERFORD II TV'S\11612 LOT 276-277 1498 E\REVIT\11612 1498 E.rvt

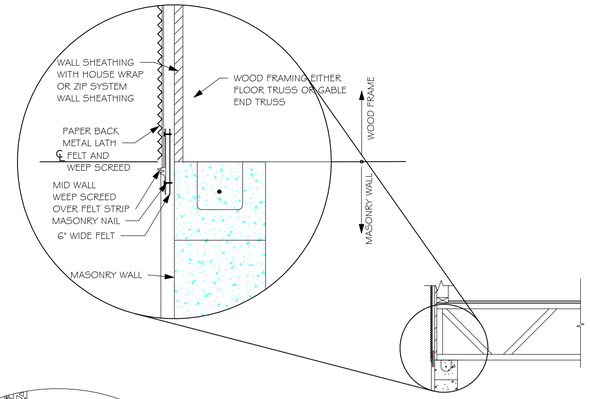

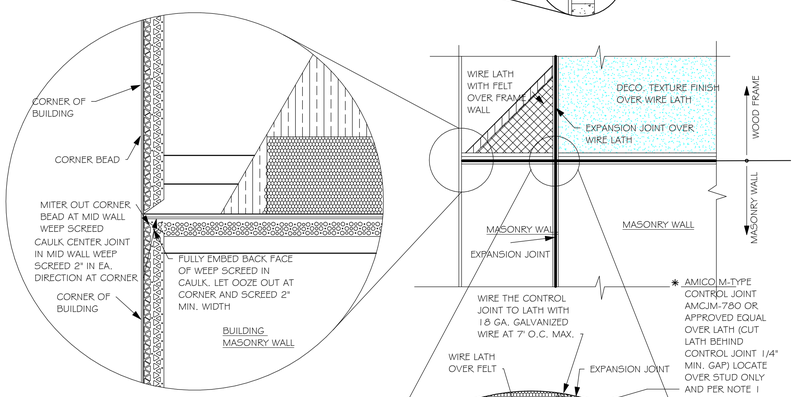

MID WALL WEEP SCREED DETAIL

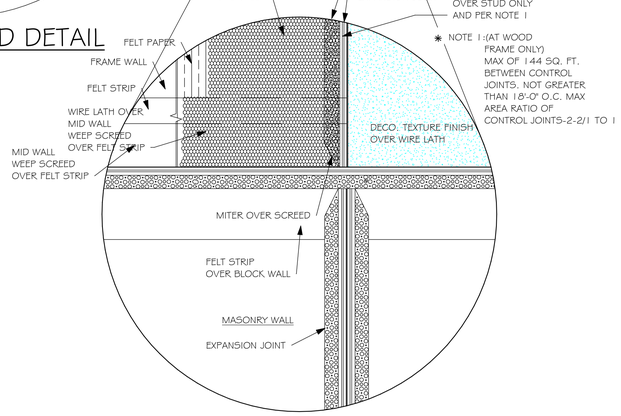

WEEP SCREED DETAIL

INSTALL AT ALL EXTERIOR WALL LOCATIONS WHERE WOOD STUD FRAMING IS ABOVE MASONRY WALLS.

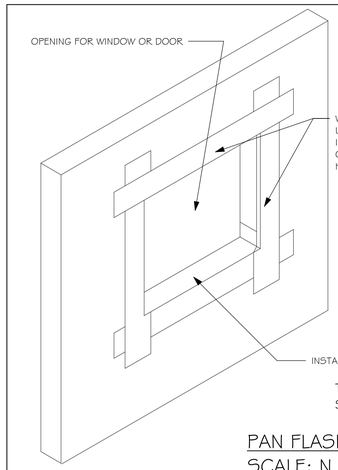

R703.4 - WHERE FLASHING INSTRUCTIONS OR DETAILS ARE NOT PROVIDED BY THE WINDOW OR DOOR MANUFACTURER OR BY THE FLASHING MANUFACTURER, "PAN FLASHING" SHALL BE INSTALLED AT THE SILL OF EXTERIOR WINDOW AND DOOR OPENINGS. PAN FLASHING SHALL BE SEALED OR SLOPED IN SUCH A MANNER AS TO DIRECT WATER TO THE SURFACE OF THE EXTERIOR WALL FINISH OR TO THE WATER-RESISTIVE BARRIER FOR SUBSEQUENT DRAINAGE. OPENINGS USING PAN FLASHING SHALL INCORPORATE FLASHING OF PROTECTION AT THE HEAD AND SIDES.

"PAN FLASHING" IS A GENERIC TERM THAT USED TO REFER TO "METAL PAN FLASHING". HOWEVER MANY MODERN MATERIALS HAVE BEEN DEVELOPED FOR THE SAME FUNCTION SUCH AS:
- FLEXIBLE PEEL AND STICK FLASHING MEMBRANE
-FLUID APPLIED FLASHING
FOR SUCH PRODUCTS FOLLOW THE MANUFACTURERS INSTALLATION REQUIREMENTS

FOR IN-DEPTH FLASHING INSTRUCTIONS, REFER TO THE FOLLOWING PUBLICATIONS:
FMA/AAMA 100
FMA/AAMA 200
FMA/WDMA 250
FMA/AAMA/WDMA 300

THE FLASHING INSTRUCTIONS FROM THE WINDOW/ DOOR MFR., OR THE FLASHING MFR., SHALL SUPERCEDE THIS DETAIL

PAN FLASHING PER R703.4

SCALE: N.T.S.

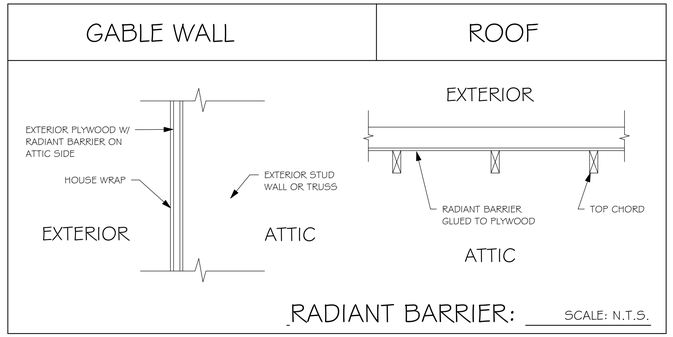

RADIANT BARRIER: SCALE: N.T.S.

NOTE: EXTERIOR WALLS ADJACENT TO ATTIC SPACE, INCLUDING KNEEWALLS AND GABLE END WALLS, MUST HAVE RADIANT BARRIER AND HOUSE WRAP.

DESIGN IN ACCORDANCE WITH THE RESIDENTIAL FLORIDA BUILDING CODE 2017 - 6TH EDITION

D·R·HORTON® America's Builder
Gulf Coast Drafting & Design, Inc.
EMAIL: PLANS@GULFCOASTDRAFTING.COM
PHONE: 239-540-1822
1515 SE 47TH ST. CAPE CORAL, FL 33904

LOT: 276-277
SUBDIVISION: WATERFORD II TVs
ADDRS: 7289-7281 WEST LENOX CIR.
D.R.H. #: 579170065-066

MODEL 1498
VILLA E
GCD JOB # 11612

DATE: 05/20/20
DRAWN BY: JSL
CHECKED BY: JWC
REVISED:
PLAN: INTERIOR WALL SECTIONS
SCALE: As indicated

A-7

L:\0-New Data\1-MASTER 2019\2019-BUILDERS\DR HORTON 2019\SUBDIVISIONS\WATERFORD II TVS\11612 LOT 276-277 1498 E\REVIT\11612 1498 E.rvt

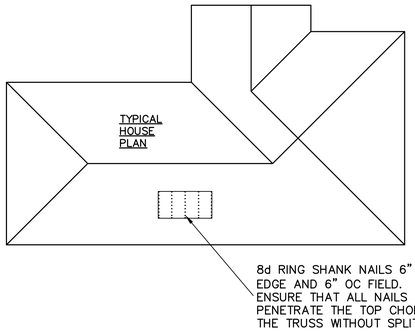

1 ROOF DECK NAILING PATTERN
SCALE: NTS

SHEATHING SCHEDULE

EXTERIOR STUD WALL	FLOOR
7/16" ZIP SYSTEM WALL SHEATHING BY HUBER ENGINEERED WOODS LLC, NAILED W/ 8d COMMON WIRE @ 6" O.C. EDGE AND 6" O.C. FIELD. PROVIDE 2x4 BLOCKING AT ALL JOINTS. INSTALL SHEATHING AND SEAM TAPE IN STRICT ACCORDANCE WITH MFR. WRITTEN INSTRUCTIONS.	N/A
ROOF	**EXTERIOR CEILING AND SOFFIT**
A.P.A. RATED SHEATHING, EXPOSURE 1, SPAN RATING 24/16 OR BETTER. FASTEN WITH 8d RING SHANK NAILS @ 6" O.C. EDGE AND 6" O.C. FIELD. (WHEN ½" ZIP BRAND ROOF SHEATHING IS USED, H-CLIPS ARE NOT REQUIRED) (RING SHANK NAILS PER R803.2.3.1: 0.113" NOMINAL SHANK DIAMETER, RING DIA. OF 0.012" OVER SHANK DIAMETER, 16 TO 20 RINGS PER INCH, 0.280" DIAMETER FULL ROUND HEAD, 2" NAIL LENGTH)	OPTIONS: 1) 1x4 STRIPPING @ 16"OC w/ 2-8d NAILS TO EACH TRUSS, ⅝" EXTERIOR GYPBOARD CEILING, FASTEN w/8d NAILS OR 1⅝" DRYWALL SCREWS @ 6"OC EDGE & FIELD. 2) ⅜" BC PLYWOOD NAILED w/ 6d COMMON @ 6" OC EDGE & FIELD. 3) VINYL OR ALUMINUM PERFORATED SOFFIT INSTALLED PER MANUFACTURER INSTRUCTIONS TO MEET WIND PRESSURES PER R703.1.2.1.

NOTE: EXTERIOR CEILINGS AND SOFFITS 1) AND 2) SPECIFIED HERE MEET THE DESIGN WIND PRESSURES PER R703.1.2.1.

2

WINDOW/DOOR/SOFFIT DESIGN WIND PRESSURES

WIND PRESSURES PER ASCE7-10, 160 MPH, EXPOSURE C, AND CONVERTED TO ALLOWABLE STRESS DESIGN PRESSURES USING 0.6W LOAD FACTOR. (Vasd=124 MPH, RISK CAT II, ENCLOSED, kd=0.85, h=15')

TYPE	INTERIOR ZONE 4	END ZONE 5
SOFFIT	+33.5 −36.3	+33.5 −44.8
TYPICAL WINDOWS & DOORS	+33.5 −36.3	+33.5 −44.8
8' OR 9' GARAGE DOORS	+29.4 −33.3	
16' OR 18' GARAGE DOORS	+28.2 −31.5	

(SEE PLAN FOR OTHER SPECIFIC PRESSURES)

1) TABLE MAY BE USED FOR ANY SIZE WINDOW OR DOOR IN EACH TYPE.
2) USE "INTERIOR ZONE 4" PRESSURES UNLESS WINDOW OR DOOR IS LOCATED WITHIN THE "END ZONE 5" (SEE DIAGRAM BELOW), THEN USE THE HIGHER PRESSURES UNDER THE "END ZONE 5" COLUMN.
3) ALL GLASS / GLAZING SHALL BE IMPACT RATED OR USE IMPACT RATED SHUTTERS.
4) SUBMIT PRODUCT APPROVALS TO THE BUILDING DEPARTMENT AS REQUIRED BY THE LOCAL JURISDICTION.
5) MANUFACTURED SOFFIT PRODUCTS SHALL BE INSTALLED PER MFR ENGINEERING SPEC SHEETS.

* ON IRREGULAR SHAPED BUILDINGS, THERE IS NO GUIDANCE IN THE CODE FOR HOW FAR A CORNER MUST PROTRUDE FROM THE MAIN BUILDING TO BE CONSIDERED 'ZONE 5'. WE HAVE CHOSEN >15'. THIS IS SUBJECT TO JUDGEMENT CALL BY THE AUTHORITY HAVING JURISDICTION.

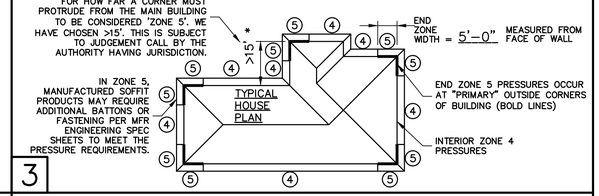

3

DESIGN CRITERIA:

DESIGN IN ACCORDANCE WITH REQUIREMENTS OF THE FLORIDA BUILDING CODE 6th EDITION (2017) RESIDENTIAL

1. FLOOR & ROOF UNIFORM LOADS:
   ELEVATED FLOORS: LIVE LOAD 40 PSF, DEAD LOAD 20 PSF
   ROOF: LIVE TOP CHORD 20 PSF
   LIVE BOTTOM CHORD 10 PSF (NON-CONCURRENT w/ TCLL)
   CEMENT ROOF TILE DEAD LOAD 25 PSF TOTAL
   SHINGLE/METAL ROOFING DEAD LOAD 15 PSF TOTAL
   MINIMUM DEAD LOAD FOR WIND: TC 5 PSF, BC 5 PSF
   DEFLECTION CRITERIA:
   FLOOR L/480 LIVE, L/360 TOTAL
   ROOF L/240 LIVE, L/180 TOTAL

2. WIND LOADS:
   WIND DESIGN PER ASCE7-10
   BASIC WIND SPEED (ASCE7-10) 160 MPH
   NOMINAL WIND SPEED (Vasd TABLE R301.2.1.3) 124 MPH
   BUILDING CATEGORY II
   IMPORTANCE FACTOR 1.00
   EXPOSURE C
   MEAN ROOF HEIGHT = 15 FT
   ROOF PITCH 5/12
   ENCLOSURE CLASS. ENCLOSED
   INTERNAL PRES. COEFF. +/- 0.18
   WINDOW/DOOR DESIGN WIND PRESSURE, SEE TABLE IN DETAIL 3.
   SOFFITS - PER R703.1.3, ALL SOFFITS SHALL BE CAPABLE OF RESISTING THE DESIGN PRESSURES SPECIFIED IN TABLE R301.2(2) FOR WALLS. PER R616.4, SOFFIT TESTING SHALL USE ASCE7 DESIGN PRESSURES USING 0.6W LOAD FACTOR.

3. REINFORCED CONCRETE:
   DESIGN AS PER ACI 318-14
   REQUIRED COMPRESSIVE STRENGTH AT 28 DAYS:
   SLAB ON GRADE f'c = 2500 PSI
   3½" MINIMUM THICKNESS REINFORCED WITH 6x6 w1.4xw1.4 WWF OR FIBERMESH.
   CONVENTIONAL SHALLOW FOOTINGS f'c = 2500 PSI
   BEAMS AND COLUMNS f'c = 3000 PSI
   ALL OTHER CONCRETE (U.N.O.) f'c = 3000 PSI
   UNLESS OTHERWISE SHOWN ON DRAWINGS, MINIMUM CONCRETE COVER FOR REINFORCING SHALL BE AS FOLLOWS:
   FOOTINGS 3"
   SLAB ON GRADE CENTERED
   BEAMS 1½"
   COLUMNS 1½"
   ALL REINFORCING STEEL SHALL BE PLACED IN ACCORDANCE WITH THE TYPICAL BENDING DIAGRAMS AND PLACING DETAILS OF ACI STANDARDS AND SPECIFICATIONS. ALL REINFORCING STEEL SHALL BE HELD SECURELY IN POSITION WITH STANDARD ACCESSORIES DURING PLACING OF CONCRETE.
   REINFORCING STEEL - ASTM A615 GRADE 40 FOR #3
   GRADE 60 FOR #4 TO #11

   WELDED WIRE FABRIC - ASTM A185

   SPLICES IN REINFORCING, SHALL BE 40 BAR DIAMETERS. NON-CONTACT LAP SPLICES MAY BE USED PROVIDED REINFORCING IS NOT SPACED MORE THAN 5" APART FOR #5 BARS.

   FORMWORK AND SHORING SHALL REMAIN IN PLACE UNTIL CONCRETE HAS REACHED AT LEAST 2/3 OF THE REQUIRED 28 DAY STRENGTH.

4. REINFORCED MASONRY:
   DESIGN PER ACI 530-13
   REQUIRED COMPRESSIVE STRENGTHS:
   MASONRY WALLS f'm = 1500 PSI

   REINFORCING STEEL - ASTM A615 GRADE 60.
   SPLICES IN REINFORCING, SHALL BE 48 BAR DIAMETERS.
   ALL CONCRETE MASONRY UNITS SHALL BE COMPOSED OF ASTM C90, GRADE N-1 HOLLOW CONCRETE MASONRY UNITS WITH TYPE 'S' MORTAR. GROUT ALL CELLS CONTAINING VERTICAL REINFORCEMENT WITH 3000 PSI PEA ROCK CONCRETE GROUT. ALL CELLS BELOW FINISHED GRADE SHALL BE GROUTED SOLID. ALL EXTERIOR WALLS SHALL BE REINFORCED FULL HEIGHT AT DOT LOCATIONS ON PLAN.

5. DELEGATED-ENGINEERED WOOD ROOF & FLOOR TRUSSES:
   ALL WOOD ROOF AND FLOOR TRUSSES SHALL BE DESIGNED BY A DELEGATED TRUSS ENGINEER PER RULE 61G15-31.003 OF THE FLORIDA ADMINISTRATIVE CODE. ALL TRUSSES SHALL HAVE TEMPORARY BRACING PER "COMMENTARY AND RECOMMENDATIONS FOR HANDLING, INSTALLING AND BRACING METAL PLATE CONNECTED WOOD TRUSSES, HIB-91." FOR OTHER BRACING REQUIREMENTS, NOTIFY ENGINEER. PROVIDE PERMANENT BRACING PER TRUSS MFR. SHOP DRAWINGS. IF PERMANENT BRACING IS NOT SPECIFIED, CONTACT ENGINEER.

6. FOUNDATION:
   CONVENTIONAL SHALLOW CONCRETE FOOTINGS
   SOIL BEARING CAPACITY 2000 PSF
   THE CONTRACTOR SHALL BE RESPONSIBLE FOR DETERMINING THE SUITABILITY OF THE SOIL CONDITIONS FOR THE INTENDED STRUCTURE AND ASSUMED SOIL BEARING CAPACITY. IT IS RECOMMENDED THAT A GEOTECHNICAL FIRM BE HIRED TO PERFORM A SITE EVALUATION.

7. DIMENSIONS: VERIFY ALL DIMENSIONS WITH HOUSE PLANS. SEE HOUSE PLANS, MECHANICAL, ELECTRICAL AND PLUMBING DRAWINGS FOR EMBEDS, OPENINGS, SLEEVES, ETC. WHICH ARE NOT SHOWN ON STRUCTURAL DRAWINGS.

8. MEANS AND METHODS: THE STRUCTURAL ENGINEER SHALL NOT HAVE CONTROL OR BE RESPONSIBLE FOR CONSTRUCTION MEANS, METHODS, TECHNIQUES, PROCEDURES, OR SEQUENCES TEMPORARY BRACING, SHORING, GUYING OR OTHER MEANS TO SUPPORT STRUCTURAL ELEMENTS IN PLACE DURING CONSTRUCTION. FOR THE ACTS OR OMISSIONS OF THE CONTRACTOR, OR ANY OTHER PERSONS PERFORMING THE WORK OR FOR THE FAILURE OF ANY OF THEM TO CONSTRUCT THE WORK IN ACCORDANCE WITH THE CONTRACT DOCUMENTS.

9. SHOP DRAWINGS: SHOP DRAWINGS SHALL BE PREPARED AND SUBMITTED TO THE ENGINEER FOR REVIEW FOR ALL STRUCTURAL ELEMENTS UTILIZING PREFABRICATED COMPONENTS. ONE SET OF SIGNED & SEALED TRUSS ENGINEERING SHALL BE DELIVERED TO THE ENGINEER OF RECORD FOR THE STRUCTURE PER FLORIDA ADMINISTRATIVE CODE 61G15-30.005 AND 61G15-31.003.

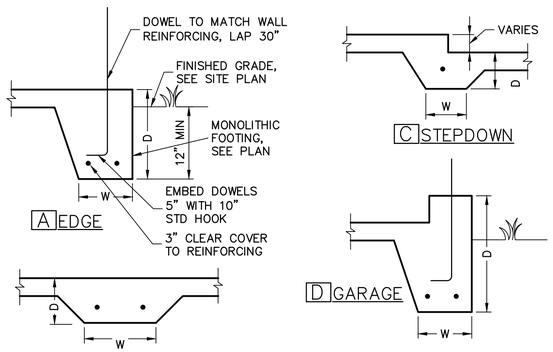

4 MONOLITHIC FOOTINGS
SCALE: 3/4" = 1'-0"

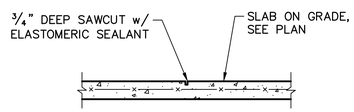

NOTES:
1) PROVIDE SAWCUTS TO CREATE APPROXIMATE 20' X 20' MAXIMUM SQUARES.
2) SAWCUT CONCRETE SLAB WITHIN 4 TO 12 HOURS OF CONCRETE PLACEMENT.

5 SLAB SAWCUT DETAIL
SCALE: NTS

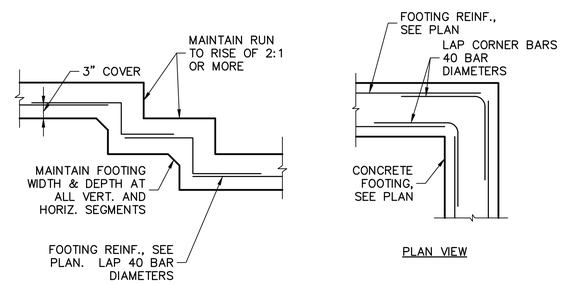

6 STEP FOOTING
SCALE: NTS

FOOTING CORNER BARS
SCALE: NTS

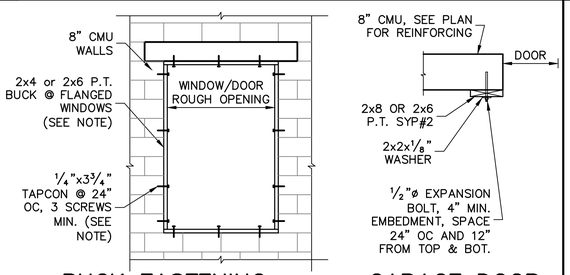

BUCK FASTENING

GARAGE DOOR

NOTE: THIS BUCK FASTENING DETAIL IS INTENDED FOR FLANGED WINDOW/DOOR PRODUCTS THAT FASTEN THRU THE FLANGE WITH WOOD SCREWS TO THE BUCK. FOR WINDOW/DOOR PRODUCTS THAT DO NOT HAVE A FLANGE AND FASTEN INSTEAD OUTWARD THRU THE FRAME, USE MASONRY SCREWS PER MFR. THAT ARE LONG ENOUGH TO PENETRATE 2-1/4" INTO THE MASONRY. IN THIS CASE, THE BUCK MATERIAL IS SIMPLY A SPACER AND MAY BE 1x4 OR 1x6 OR OMITTED ENTIRELY AND THE SPACER MAY BE TACKED IN PLACE WITH MASONRY NAILS OR PINS.

7

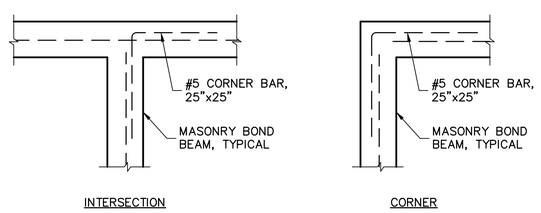

8 CORNER BAR DETAIL IN BOND BEAMS
SCALE: 3/4" = 1'-0"

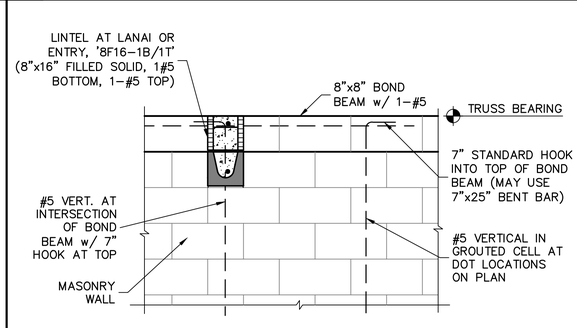

9 BOND BEAM REINFORCING DETAIL
SCALE: 3/4" = 1'-0"

RETROFIT STRAPS TO CONCRETE/MASONRY

TRUSS UPLIFT (LBS) @ 24" OC	CONNECTOR	
TO 840	1-MTSM16 or 20	7-10dx1½", 4-¼x2¼ TITEN
TO 1045	1-HTSM16 or 20	8-10dx1½", 4-¼x2¼ TITEN
TO 2090	2-HTSM16 or 20	8-10dx1½", 4-¼x2¼ TITEN
TO 4300	2-LGT2	16-16d, 7-¼"x2¼" TITEN
TO 3480	HTT16	18-16d, ⅝"ø ALLTHREAD, DRILL & EPOXY 10" EMBED w/ SIMPSON SET.
TO 10530	HGT-2/3	TWO ¾"ø ALTHREAD, DRILL & EPOXY 12" EMBED WITH SIMPSON SET.

NOTES:
1) WHERE EMBEDDED STRAP IS MISSING OR MIS-LOCATED, PROVIDE A STRAP FROM THE ABOVE LIST AT EACH ROOF TRUSS BEARING POINT, BASED ON THE TRUSS UPLIFT VALUES IN THE SIGNED AND SEALED TRUSS DESIGN PACKAGE.
2) CONNECTORS ARE SIMPSON STRONG TIE. ALL CONNECTORS SHALL BE INSTALLED IN STRICT ACCORDANCE WITH SIMPSON PRINTED INSTRUCTIONS.

10 RETROFIT UPLIFT CONNECTOR SCHEDULE

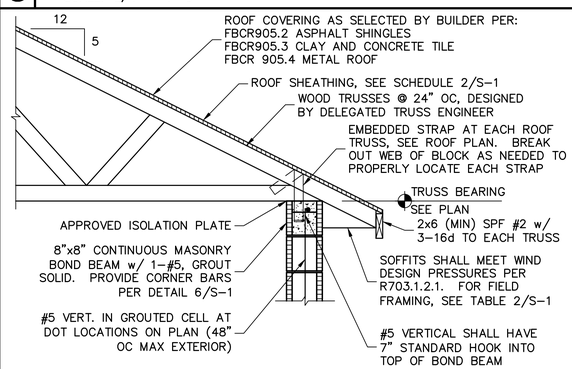

11 TRUSS STRAP TO BOND BEAM
SCALE: 3/4" = 1'-0"

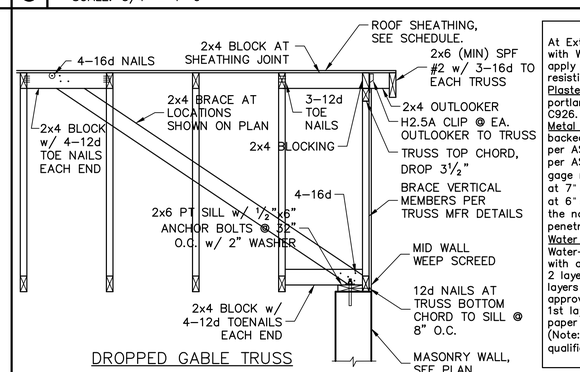

12 GABLE END BRACING
SCALE: N.T.S.

At Exterior Stud Walls and Gable Ends with Wall Sheathing, apply plaster over metal lath over water resistive barrier as follows:
Plaster R703.7.2: 3-coat 7/8" thick portland cement based plaster per ASTM C926.
Metal Lath R703.7.1: Self furring paper backed 2.5lb diamond mesh metal lath per ASTM C847, G60 galvanized, fastened per ASTM C1063 with 1-1/2" long, 11 gage nails with 7/16" head (roofing nails) at 7" oc, or 1-1/2"long, 16 gage staples at 6" oc, into the framing members (ie, the nails or staples must align with and penetrate 3/4" into the framing studs).
Water Resistive Barrier (WRB) R703.7.3: Water-resistive vapor-permeable barrier with a performance at least equivalent to 2 layers of Grade D paper. The individual layers shall be installed independently. An approved house wrap may be used for the 1st layer and metal lath with approved paper backing may be the 2nd layer (Note: ZIP wall sheathing with seam tape qualifies as the first layer).

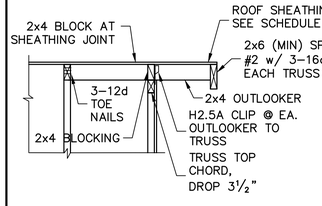

DROPPED GABLE TRUSS

13 OUTLOOKER DETAIL
SCALE: N.T.S.

REVISIONS	BY

STRUCTURAL ENGINEERING:
STRUCTURAL SYSTEMS OF NORTH FLORIDA
1634 S.E. 47th STREET, SUITE #3
CAPE CORAL, FL 33904
(239) 549-4554
CA# 8829

DESIGNED IN ACCORDANCE WITH FLORIDA BUILDING CODE 6th EDITION (2017) RESIDENTIAL

BUILDER: D·R·HORTON America's Builder

STRUCTURAL DETAILS FOR 1498 SIGNATURE VILLA

7281, 7289 WEST LENOX CIRCLE
PUNTA GORDA, FLORIDA
LOTS: 276-277 SUBDIVISION: WATERFORD

FOR SCOSTA TRUSSES, JOB # 44060, DATED 08/27/17, REVISED: 12/03/19

DESIGN/DRAWN	DWB/GH
CHECKED	DWB
DATE	05/26/20
SCALE	AS NOTED
JOB NO.	DR11613
SHEET	S-1

SHEET 1 OF 2

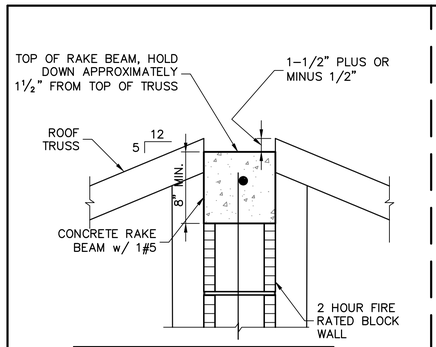

RAKE BEAM AT TOP OF FIREWALL
HOLD DOWN APPROXIMATELY 1½" FROM TOP OF TRUSS

1A TOP OF FIREWALL
SCALE: 1-1/2" = 1'-0"

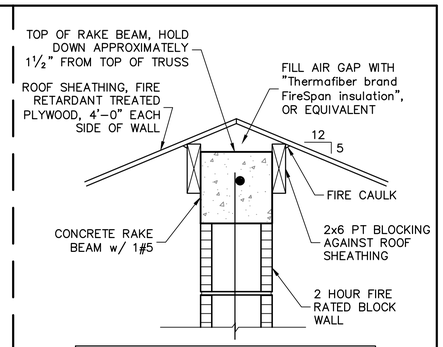

BLOCKING AT UNDERSIDE OF ROOF SHEATHING
FILL AIR GAP WITH THERMAFIBER FIRESPAN INSULATION (OR EQUIVALENT).

1B TOP OF FIREWALL
SCALE: 1-1/2" = 1'-0"

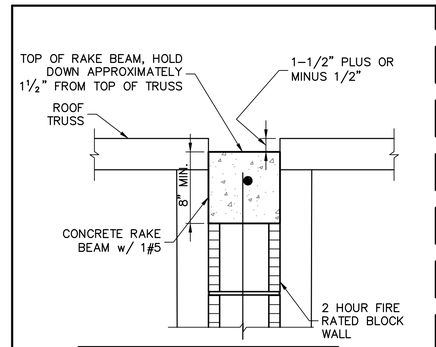

RAKE BEAM AT TOP OF FIREWALL
HOLD DOWN APPROXIMATELY 1½" FROM TOP OF TRUSS

2A TOP OF FIREWALL
SCALE: 1-1/2" = 1'-0"

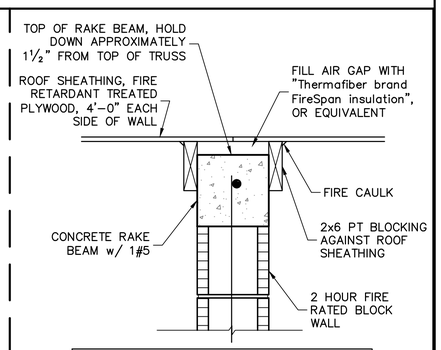

BLOCKING AT UNDERSIDE OF ROOF SHEATHING
FILL AIR GAP WITH THERMAFIBER FIRESPAN INSULATION (OR EQUIVALENT).

2B TOP OF FIREWALL
SCALE: 1-1/2" = 1'-0"

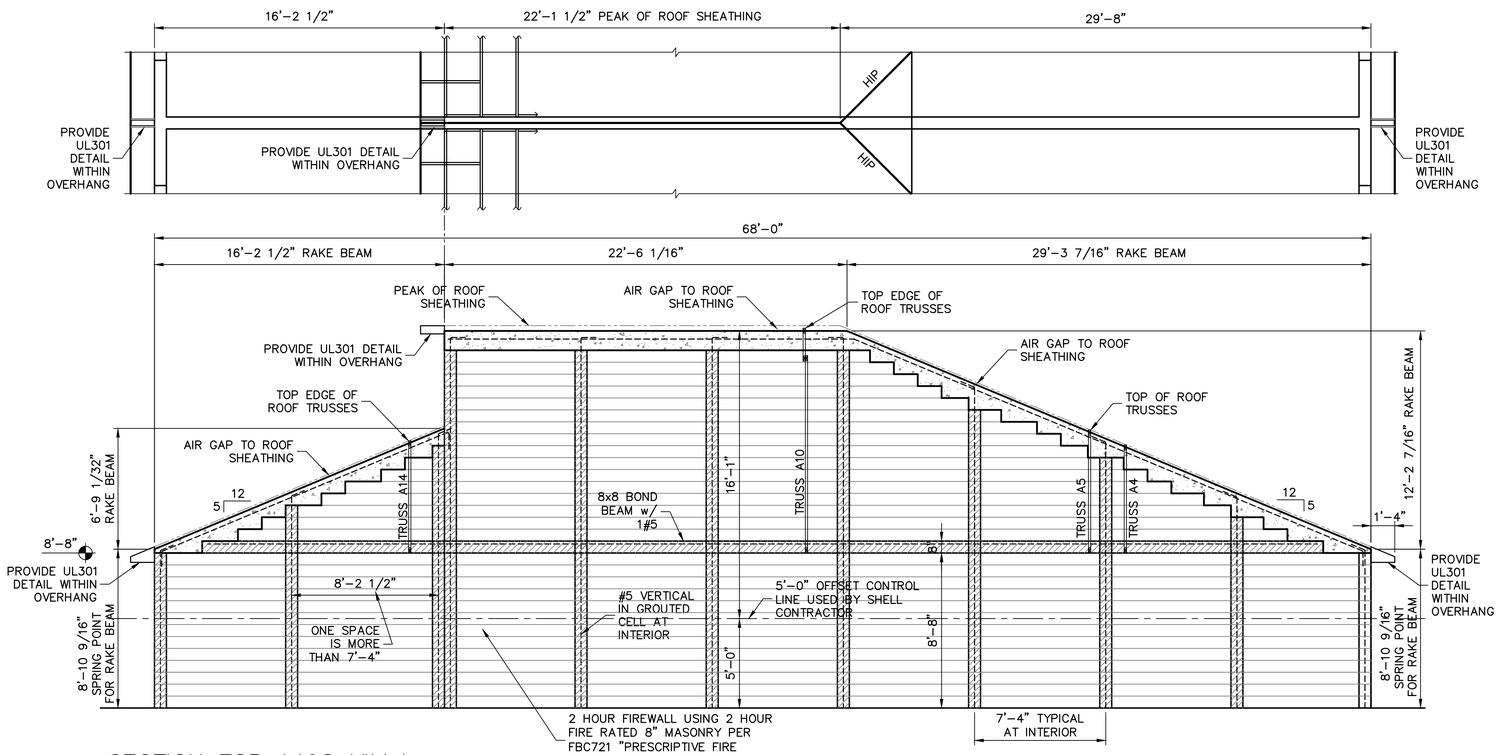

SECTION FOR 1498 VILLA
FOR 5:12 ROOF PITCH
SCALE: 1/4" = 1'-0"

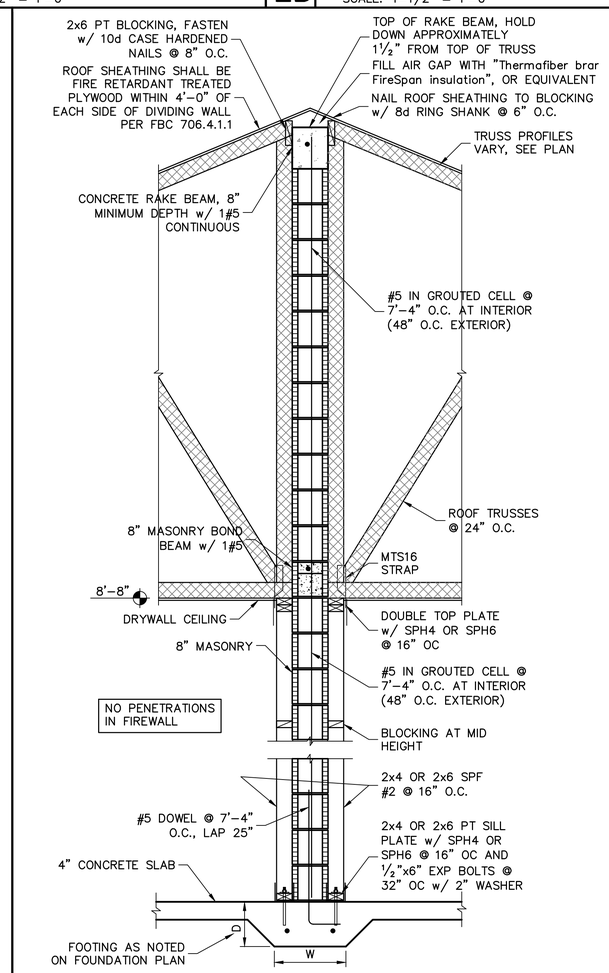

4 2 HOUR FIREWALL AT LIVING AREA
SCALE: 3/4" = 1'-0"

REVISIONS	BY

STRUCTURAL ENGINEERING:
STRUCTURAL SYSTEMS OF NORTH FLORIDA
1634 S.E. 47th STREET, SUITE #3
CAPE CORAL, FL 33904
(239) 549-4554
CA# 8829

DERRICK W. BERGENER
LICENSE No. 58552
STATE OF FLORIDA
PROFESSIONAL ENGINEER

DESIGNED IN ACCORDANCE WITH FLORIDA BUILDING CODE 6th EDITION (2017) RESIDENTIAL

BUILDER: D·R·HORTON America's Builder

STRUCTURAL DETAILS FOR 1498 SIGNATURE VILLA

7281, 7289 WEST LENOX CIRCLE
PUNTA GORDA, FLORIDA
LOTS: 276-277 SUBDIVISION: WATERFORD

FOR SCOSTA TRUSSES, JOB # 44060, DATED 08/27/17, REVISED: 12/03/19

DESIGN/DRAWN	DWB/GH
CHECKED	DWB
DATE	05/26/20
SCALE	AS NOTED
JOB NO.	DR11613
SHEET	S-2

SHEET 2 OF 2