FRAME DOWN BY G.C.
AS REQUIRED FOR COFFER

ALL LANAI'S AND ENTRIES ARE
DESIGNED PARTIALLY ENCLOSED

STRUCTURAL FASCIA BY G.C.
AS REQ BY ENGINEERING

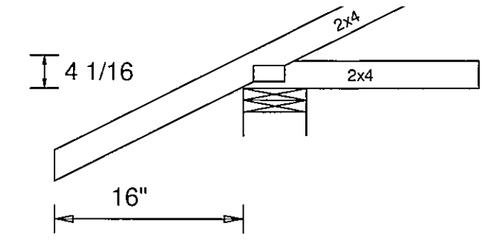


Engineer of Record for the Structure
Structural Systems of N. FL, Inc.
Derek Bergener, PE # 58552
1634 SE 47th Street # 3
Cape Coral, FL 33904

Sign: Date: 10/10/13

Reviewed for conformance with the design intent of the structure and specified design criteria.
☒ Accepted As is ☐ Accepted As noted ☐ Revise and Resubmit

## BEARING KEY

9'-4" A.F.F.

13' 11" A.F.F.

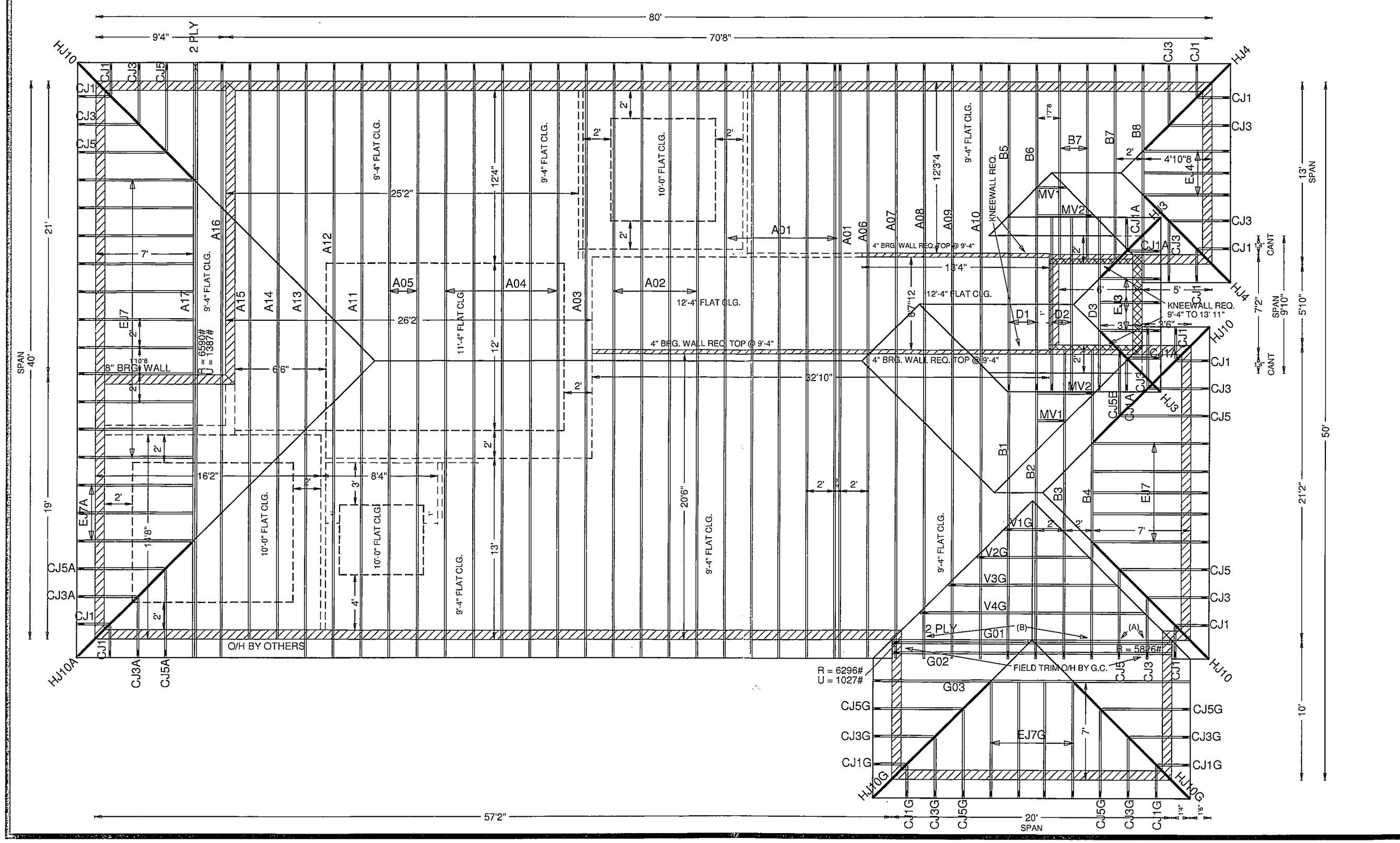


(A)=LUS24 (F)=HGUS28-3 (K)=SUL26
***=HUS26 (G)=GTU80 (L)=SUR26
(C)=HUS28 (H)=THGBH3 (M)=HHUS46
(D)=HHUS28-2 (I)=THGBH4 (N)=THA422
(E)=HGUS28-2 (J)=THJA26

⊓⊓ = Hanger Symbol Denotes Truss - to - Truss Connection.
*** All Hangers are HUS26 Unless Otherwise Noted.

## Design Criteria

MWFRS and COMPONENTS & CLADDING
Wind Load Type : ASCE 7-10
Building Type : Enclosed
Building Exposure : B
Usage : Cat II Residential 1.0

Bottom Chord Analyzed with 10 PSF Non-Concurrent Live Load and 20 PSF Concurrent Live Load on Trusses Designed with Storage as Specified on Layout See Shop Drawings for Specifics.

| GRAVITY | | WIND | |
|---|---|---|---|
| TC LL | 20 PSF | TC DL | 5 PSF |
| TC DL | 20 PSF | BC DL | 5 PSF |
| BC DL | 10 PSF | TOTAL | 10 PSF |
| TOTAL | 50 PSF | | |

DURATION= 1.25 WIND = 160 MPH

Spacing = 24 " O.C.

## Your Signature WILL Acknowledge:

1) Authorization for FABRICATION.
2) Verification of ALL Dimensions, Conditions, and Trusses. Trusses will be made in STRICT Accordance with this Placement Plan. It is YOUR responsibility to check this plan.
3) Erection of trusses per TPI Bulletin BCSI-B1
4) ALL permanent and temporary bracing, is CONTRACTOR'S responsibility.
5) Any Valleys or Ceiling drops NOT provided by Truss Plant are to be FIELD FILLED by Contractor.
6) Truss Plant supplies only TRUSS to TRUSS Connections.
7) NO back charges or crane charges of any kind will be accepted unless SPECIFICALLY AUTHORIZED in writing by Truss Plant Management.
8) Hip Jacks & Corner Jacks are DOUBLE beveled @ 45. Jacks requiring an angle other than this are to be cut in field by OTHERS.

Signed: _____
Return One Approved Placement Plan

Date: _____
Scheduling will NOT start until RETURNED!!

## Revisions

| # | Date | Remarks | Int. |
|---|---|---|---|
| 1 | 09/30/13 | ADDED 3 CAR GARAGE | RAC |


Raymond Building Supply Corp

RAYMOND BUILDING SUPPLY SINCE 1957

North Fort Myers
7751 Bayshore Rd.
N. Fort Myers, Fl. 33917
Tel (239) 731-8300
Fax (239) 731-0363

North Port
Tel (941) 429-1212

Naples
Tel (239) 348-7272


## Job Information

RBS# : 13075396
Builder: D.R. HORTON
Owner : LOT 33
County : LEE
City : CAPE CORAL
Address: 283 DESTINY WAY
Lot : 33
Block :
Sub : CELEBRATION
Model : 2431 A-3 CAR GL

Roof Covering: SHINGLE/TILE
Scale : 3/16" = 1'-0"
Date : September 30, 2013
Drawn By: Ramiro Chavez

OCT 15 2013

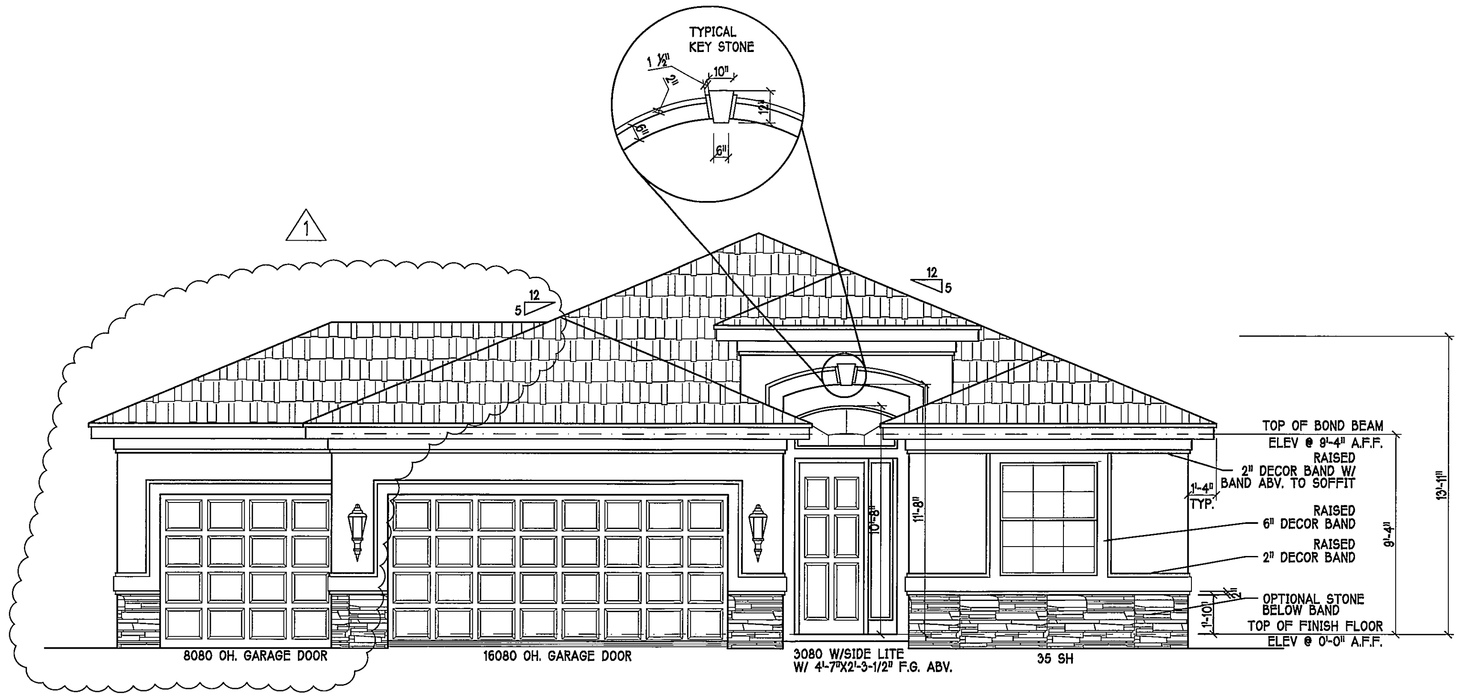


FRONT ELEVATION: "A" SCALE: 1/4" = 1'-0"

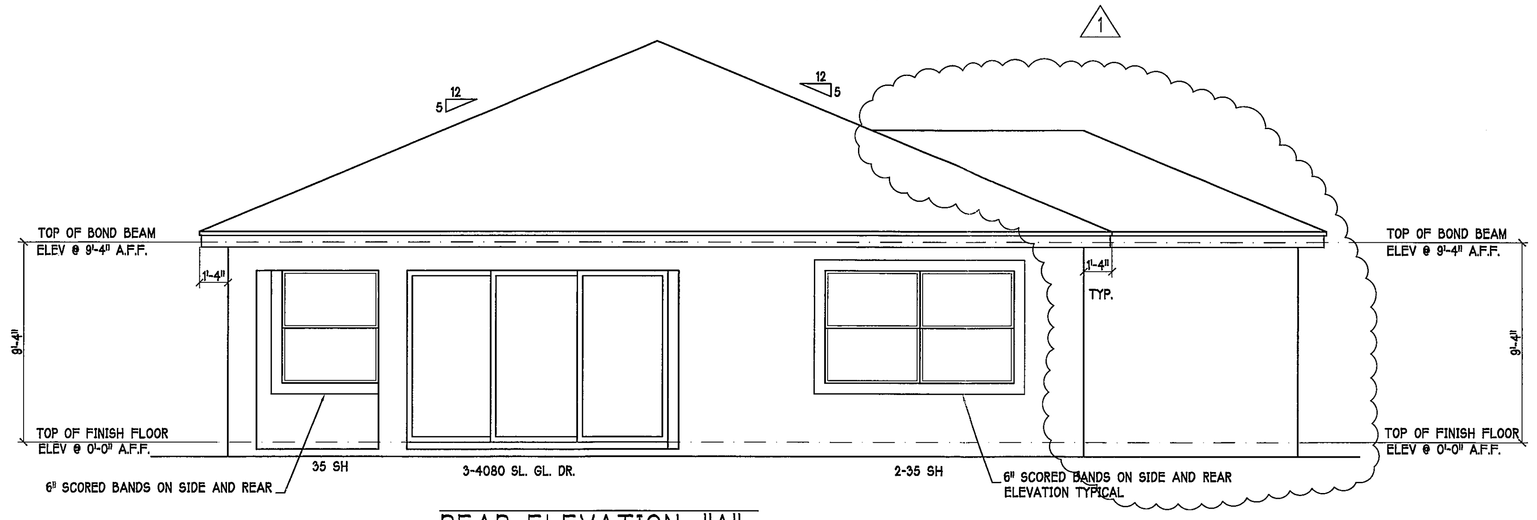


REAR ELEVATION: "A" SCALE: 1/4" = 1'-0"

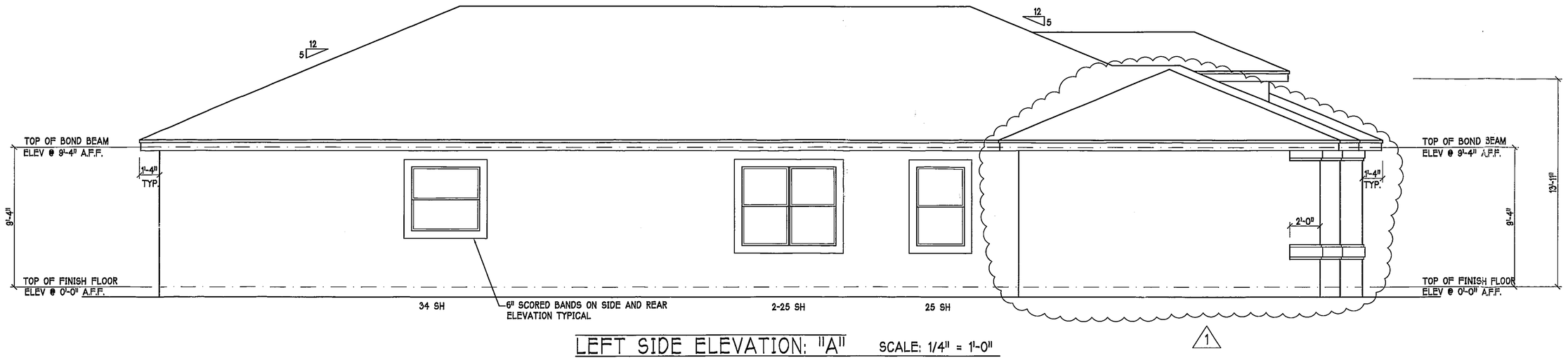


LEFT SIDE ELEVATION: "A" SCALE: 1/4" = 1'-0"

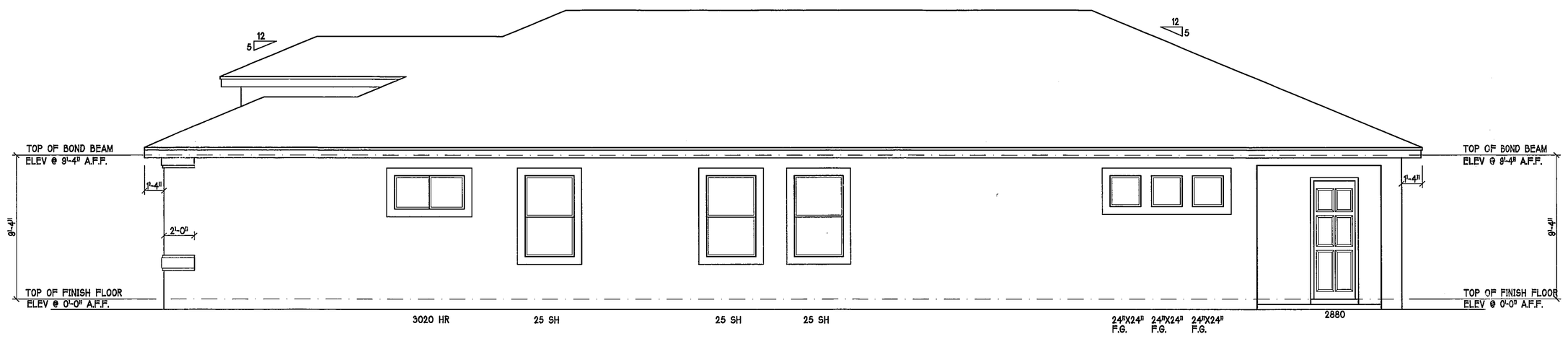


RIGHT SIDE ELEVATION: "A" SCALE: 1/4" = 1'-0"

REVIEWED FOR CODE COMPLIANCE CAPE CORAL BUILDING DIVISION. DATE 10/2/13 BY ALL CONSTRUCTION SHALL BE IN COMPLIANCE WITH THE LOCAL BUILDING CODE. THE APPROVAL OF THIS PLAN DOES NOT GIVE THE PERMITTEE THE RIGHT TO VIOLATE COVENANTS, RESTRICTIONS, EASEMENTS OR OTHER PROPERTY RIGHTS.

OCT 15 2013

DESIGN IN ACCORDANCE WITH THE FLORIDA BUILDING CODE 2010

D·R·HORTON America's Builder

Gulf Coast Drafting & Design
Phone (239) 540-1822
Fax (239) 540-7759

This signature and seal is for work performed by this Structural Engineer of Record (SER) as shown and described in these construction documents. This SER is responsible for structural, mechanical, electrical, fire, life safety, accessibility, energy, site work, civil, or geotechnical.

STRUCTURAL ENGINEERING

STRUCTURAL SYSTEMS OF NORTH FLORIDA
6400 Cypress Rd., Ste. 103
Cape Coral, FL 33904
(239) 549-4554
CA# 8829

DERICK BERGENER P.E.
OCT 10 2013
FL PE #86652

| | |
|---|---|
| LOT: 33 | BLOCK: |
| SUBDIV: CELEBRATION CAPE | |
| ADDRESS: 283 DESTINY CIRCLE | |
| G.C.D. JOB #: 5061 | |
| MODEL: UNIT 2431 | |
| RESIDENCE FOR: SPEC | |

| | |
|---|---|
| DATE: | 8-19-13 |
| DRAWN BY: | GCH |
| CHECKED BY: | JWC |
| REVISED: 1 | 10-8-2013 |
| PLAN: | ELEVATIONS |
| SCALE: | 1/4" = 1'-0" |
| SHEET# | A1-A |

| PAD FOOTING SCHEDULE | | | | | | |
|---|---|---|---|---|---|---|
| USED | TYPE | LENGTH | WIDTH | DEPTH | BOTTOM REINF. LONG WAY | BOTTOM REINF. SHORT WAY | REMARKS |
| X | A | 2'-6" | 2'-6" | 1'-0" | 3-#5 | 3-#5 | - |
| | B | 3'-0" | 3'-0" | 1'-0" | 4-#5 | 4-#5 | - |
| | C | 3'-6" | 3'-6" | 1'-0" | 4-#5 | 4-#5 | - |
| | D | 4'-0" | 4'-0" | 1'-2" | 5-#5 | 5-#5 | - |
| | E | 5'-0" | 5'-0" | 1'-2" | 6-#5 | 6-#5 | - |

| WALL FOOTING SCHEDULE | | | | | | |
|---|---|---|---|---|---|---|
| USED | TYPE | LENGTH | WIDTH | DEPTH | BOTTOM REINFORCING | SHAPE |
| | F1 | CONT. | 1'-4" | 0'-8" | 2-#5 | |
| | F2 | CONT. | 1'-8" | 0'-10" | 2-#5 | |
| X | F3 | CONT. | 1'-0" | 1'-8" | 2-#5 | |
| | F4 | CONT. | 1'-4" | 1'-8" | 2-#5 | |
| X | F5 | CONT. | 1'-4" | 1'-0" | 2-#5 | |
| X | F6 | CONT. | 1'-4" | 1'-0" | 2-#5 | |
| X | F6A | CONT. | 8" | 8" | 1-#5 | |
| | TE | CONT. | 0'-8" | 0'-8" | 1-#5 | |

ADD CURB TO GARAGE, SEE DETAIL

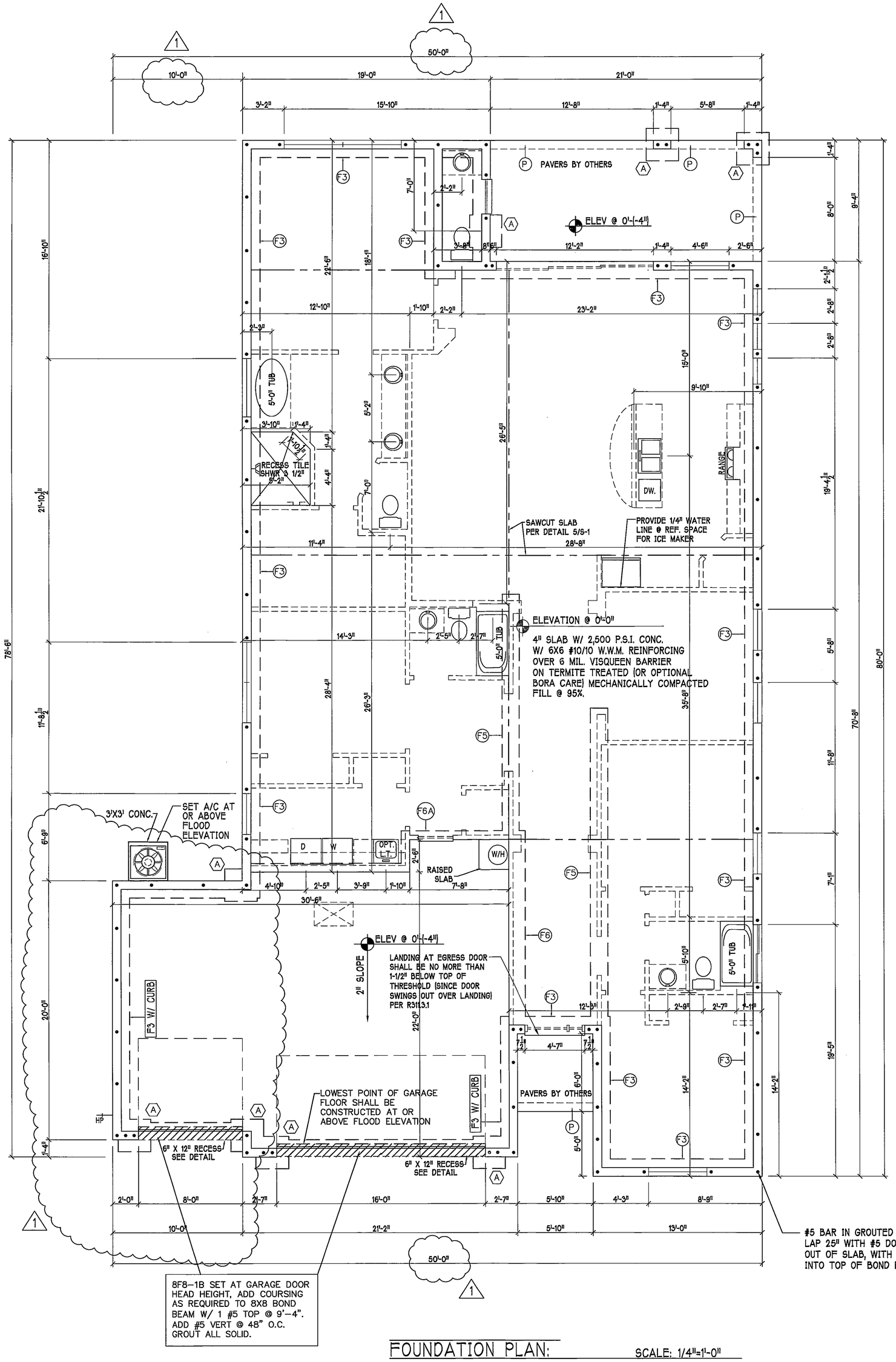


FOUNDATION PLAN: SCALE: 1/4"=1'-0"

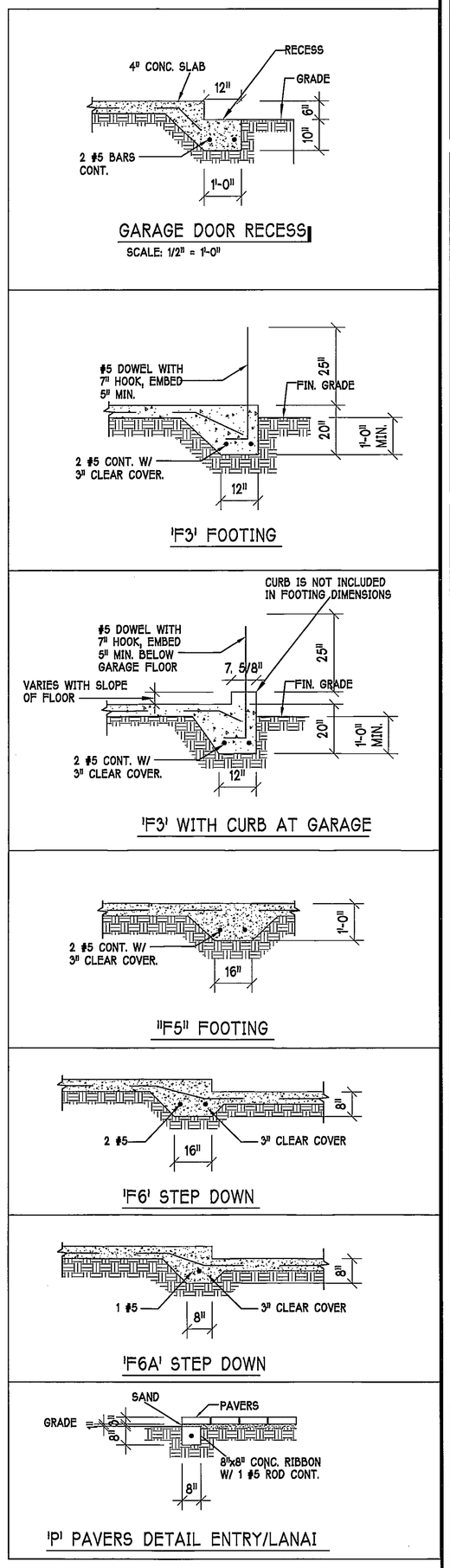


REVIEWED FOR CODE COMPLIANCE BY ... DATE 8/21/13 ... CONTRACTOR ... AREAS INCLUDED IN THIS REVIEW ARE ONLY THOSE AREAS SPECIFICALLY TOUCHED BY THE ARCHITECT'S REVISIONS. THE CONTRACTOR IS RESPONSIBLE FOR THE ENTIRE PROJECT TO BE FULLY COMPLIANT WITH ALL CODES AND ORDINANCES

## FOUNDATION PLAN

SCALE: 1/4" = 1'-0"

OCT 1 8 2013

PLAN NOTES:

1) TOP OF GROUND FLOOR SLAB DATUM ELEVATION 0'-0".
2) 'F#' DENOTES CONTINUOUS WALL FOOTING TYPE PER SCHEDULE THIS SHEET.
3) ⟨#⟩ DENOTES PAD FOOTING AT CONCENTRATED LOADS PER SCHEDULE THIS SHEET.
4) PROVIDE #5 VERTICAL REINFORCING AT DOT LOCATIONS SHOWN ON PLAN FROM FOOTING TO BOND BEAM.
5) ALL DIMENSIONS ARE TO OUTSIDE FACE OF MASONRY WALLS. SOME SLAB EDGES MAY EXTEND BEYOND FACE OF WALL.
6) FOR DIMENSIONS OF ROUGH OPENINGS IN MASONRY WALLS, COORDINATE WITH WINDOW/DOOR SUPPLIER.
7) PROVIDE PRESSURE TREATED BUCKS AT WINDOWS / DOORS PER DETAIL 7/S-1.

DESIGN IN ACCORDANCE WITH THE FLORIDA BUILDING CODE 2010

D·R·HORTON America's Builder


Gulf Coast Drafting & Design
Phone (239) 540-1822
Fax (239) 540-7759


STRUCTURAL UNDERWRITING
STRUCTURAL SYSTEMS OF NORTH FLORIDA
1626 E. KENNEDY BLVD. TAMPA, FL 33609
CAPE CORAL, FL 33904
(239) 549-4554
CA# 8829

This signature and seal is for work performed by the Structural Engineer of Record (SER) and shall not be construed to cover work performed by the SER in other disciplines such as architectural, mechanical, plumbing, electrical, fire, life safety, accessibility, energy, gas, pool, civil, or geotechnical.

DERECK BORGESENER P.E.
OCT 1 0 2013
FL REG. #60562

| | |
|---|---|
| MODEL: UNIT 2431 | LOT: 33 BLOCK: |
| | SUBDIV: CELEBRATION CAPE |
| | ADDRESS: 283 DESTINY CIRCLE |
| | G.C.D. JOB #: 5061 |
| | RESIDENCE FOR: SPEC |

| | |
|---|---|
| DATE: | 8-19-13 |
| DRAWN BY: | GCH |
| CHECKED BY: | JWC |
| REVISED: 1 | 10-8-2013 |
| PLAN: | FOUNDATION |
| SCALE: | 1/4" = 1'-0" |
| SHEET# | A-2 |

| INTERIOR DOOR SCHEDULE | | |
|---|---|---|
| MARK | DOOR WIDTH | |
| 1 | 3'-0" | PK. = POCKET DOOR |
| 2 | 2'-8" | B.F. = BI-FOLD DOOR |
| 3 | 2'-6" | B.P. = BI-PASS DOOR |
| 4 | 2'-4" | |
| 5 | 2'-0" | |
| 6 | 1'-8" | |
| 7 | 1'-6" | |

PROVIDE SAFETY GLAZING WITHIN 24" FROM EXIT DOOR.
(PER FLORIDA BUILDING CODE-R308.3.1)

NOTE:
PROVIDE SAFETY GLAZING AT BATH/SHRW. SHALL COMPLY WITH R 308.3.1

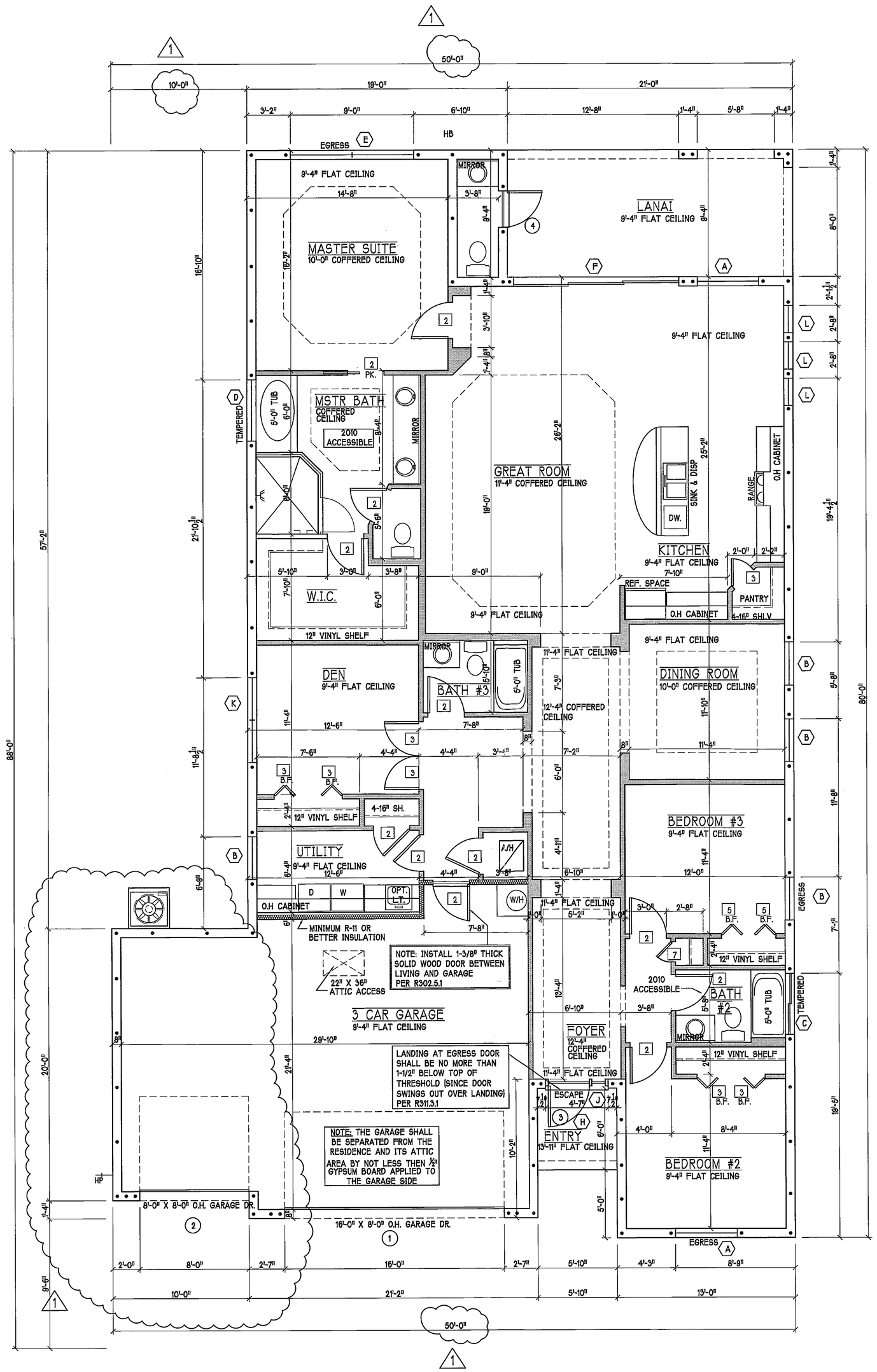


FLOOR PLAN: SCALE: 1/4"=1'-0"

WIND PRESSURES PER ASCE7-10, 160 MPH, EXPOSURE B, AND CONVERTED TO ALLOWABLE STRESS DESIGN PRESSURES USING 0.6W LOAD FACTOR.
D R HORTON Vasd=124 MPH

| MARK | SIZE CODE | PRODUCT DESCRIPTION | DOOR WIDTH | DOOR HEIGHT | ZONE | WIND PRESSURE | WIND-BORNE DEBRIS PROTECTION | QTY |
|---|---|---|---|---|---|---|---|---|
| 1 | OVERHEAD | GARAGE DOOR | 192 | 96 | 4&5 | +23.3/-26.0 | | 1 |
| 2 | OVERHEAD | GARAGE DOOR | 96 | 96 | 4&5 | +24.3/-27.5 | | 0 |
| 3 | 3080 ENTRY DR. | DISTINCTION | 36 | 96 | 4 | +27.7/-30.0 | | 1 |
| | | | | | 5 | +27.7/-37.0 | | |
| 4 | 2880 | DISTINCTION | 36 | 96 | 4 | +27.7/-30.0 | | 1 |
| | | | | | 5 | +27.7/-37.0 | | |

GARAGE DOOR ASSUMES 2' IN ZONE 5.

WIND PRESSURES PER ASCE7-10, 160 MPH, EXPOSURE B, AND CONVERTED TO ALLOWABLE STRESS DESIGN PRESSURES USING 0.6W LOAD FACTOR.
D R HORTON Vasd=124 MPH

| MARK | SIZE CODE | PRODUCT DESCRIPTION | ZONE | WIND PRESSURE | WIND-BORNE DEBRIS PROTECTION | QTY |
|---|---|---|---|---|---|---|
| A | 35 SH | | 4 | +27.7/-30.0 | SHUTTERS | 2 |
| | | | 5 | +27.7/-37.0 | | |
| B | 25 SH | | 4 | +27.7/-30.0 | SHUTTERS | 3 |
| | | | 5 | +27.7/-37.0 | | |
| C | 3020 HR | | 4 | +27.7/-30.0 | SHUTTERS | 1 |
| | | | 5 | +27.7/-37.0 | | |
| D | 34 SH | | 4 | +27.7/-30.0 | SHUTTERS | 1 |
| | | | 5 | +27.7/-37.0 | | |
| E | 2-35 SH | | 4 | +27.7/-30.0 | SHUTTERS | 1 |
| | | | 5 | +27.7/-37.0 | | |
| F | 3-4080 SL. GL. DR. | SL. GL. DOOR | 4 | +24.4/-26.7 | SHUTTERS | 1 |
| | | | 5 | +24.4/-30.6 | | |
| G | 2030 HR | | 4 | +27.7/-30.0 | SHUTTERS | 0 |
| | | | 5 | +27.7/-37.0 | | |
| H | 4'-7" X 3-1/12" FIXED GL. | 7'A-B-D" ONLY SEE ELEVATION | 4 | +27.7/-30.0 | SHUTTERS | 1 |
| | | | 5 | +27.7/-37.0 | | |
| J | 96" X 12" SIDE LITE | | 4 | +27.7/-30.0 | SHUTTERS | 1 |
| | | | 5 | +27.7/-37.0 | | |
| K | 2-25 SH | | 4 | +27.7/-30.0 | SHUTTERS | 1 |
| | | | 5 | +27.7/-37.0 | | |
| L | 2'-0" X 2'-0" | FIXED GLASS | 4 | +27.7/-30.0 | SHUTTERS | 3 |
| | | | 5 | +27.7/-37.0 | | |
| | | | | | | 15 |

PLAN NOTES:

1.) KITCHEN KNEE WALL 42 1/2" TO TOP USING 2x4 TOP PLATE.
2.) MEDICINE CABINETS OPENING 14x18 TOP OF OPENING @ 72" / 5" OFF WALL.
3.) JOB MUST BE BROOM SWEPT EVERYDAY.
4.) VERIFY ROUGH OPENING DIMENSIONS FOR ALL WINDOWS AND DOORS.
5.) PROVIDE DEAD WOOD IN ATTIC FOR OVERHEAD GARAGE DOOR HARDWARE.
6.) INSTALL SMOOTH WALLS IN KITCHEN AND ALL BATHROOM AREAS.
7.) WHERE DRYWALL CEILING IS APPLIED TO TRUSSES AT 24" O.C. USE 5/8" DRYWALL OR 1/2" SAG RESISTANT PER SEC. 702.3.5.

| CABINET BACKING | | |
|---|---|---|
| KITCHEN | UPPER TOP @ 54", 84" & 96" MICROWAVE @ 102" | BASE TOP @35" |
| MASTER BATH | UPPER | BASE- TOP @35" |
| GUEST BATH | UPPER | BASE- TOP @31" |
| LAUNDRY RM. | UPPER TOP @84" | BASE |

| BATHROOM NOTES |
|---|
| ALL TUB DECKS @ 21" A.F.F. |
| ALL BLOCKING TO BE PT IN SHOWERS |

| DOOR HEADERS | | |
|---|---|---|
| 6'-8" BIFOLD | HEADER HEIGHT | 82" A.F.F. |
| 6'-8" SWING | HEADER HEIGHT | 82 1/2" A.F.F. |
| 8'-0" SWING | HEADER HEIGHT | 98 1/2" A.F.F. |

REVIEWED FOR CODE COMPLIANCE CAPE CORAL BUILDING DIVISION. BY DATE 10/13
ALL CONSTRUCTION SHALL BE IN COMPLIANCE WITH THE FLORIDA BUILDING CODE. ALL PLANS AND DATA SHOWN ON THE DRAWING OF A CERTIFICATE DOES NOT RELIEVE THE CONTRACTOR OF HIS RESPONSIBILITY TO COMPLY WITH ALL CODES AND ORDINANCES.

**** NOTE: ****
STUB OUT FOR GAS @ OUTDOOR KITCHEN, RANGE, WATER HEATER, AND DRYER. VERIFY WITH CONTRACT AND SUBDIV. SPECS.

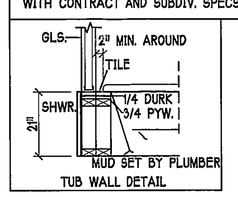

TUB WALL DETAIL

VINYL SHELF NOTES:
1) ALL CLOSET SHELVES TO BE 12"
2) ALL PANTRY & LINEN TO BE (4) 16" SHELVES 18" O.F.F. WITH 15" INCREMENT.

| SQUARE FOOTAGE | |
|---|---|
| LIVING AREA | 2431 |
| GARAGE AREA | 677 |
| ENTRY AREA | 36 |
| LANAI AREA | 196 |
| TOTAL AREA | 3339 |

| BATHROOM NOTES | |
|---|---|
| TB TOWEL BAR | ALL TUB DECKS @ 21" A.F.F. |
| TP TOILET PAPER | ALL BLOCKING TO BE PT IN SHOWERS |

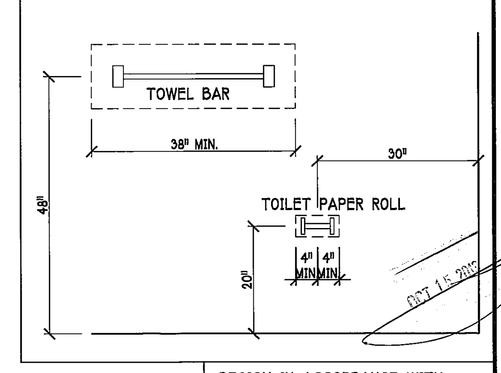


DESIGN IN ACCORDANCE WITH THE FLORIDA BUILDING CODE 2010

D·R·HORTON America's Builder


Gulf Coast Drafting & Design
Phone (239) 540-1822
Fax (239) 540-7759


This signature and seal is for work performed by the Structural Engineer of Record (SER) related to Structural Engineering only. No work was performed by the SER in the areas of civil, soils, geotechnical, environmental, land use, zoning, safety, accessibility, energy, site work, civil, or geotechnical.


STRUCTURAL ENGINEERING
STRUCTURAL SYSTEMS OF NORTH FLORIDA
1634 S.E. 47th ST. SUITE #3
CAPE CORAL, FL. 33904
(239) 549-4554
CA# 8829
DEREK BERGERNER P.E.
OCT 1 0 2013
PL RE #80652


MODEL: UNIT 2431
LOT: 33 BLOCK:
SUBDIV: CELEBRATION CAPE
ADDRESS: 283 DESTINY CIRCLE
RESIDENCE FOR: SPEC
G.C.D. JOB #: 5061

| | |
|---|---|
| DATE: | 8-19-13 |
| DRAWN BY: | GCH |
| CHECKED BY: | JWC |
| REVISED: 1 | 10-8-2013 |
| PLAN: | FLOOR |
| SCALE: | 1/4" = 1'-0" |
| SHEET# | A-3 |

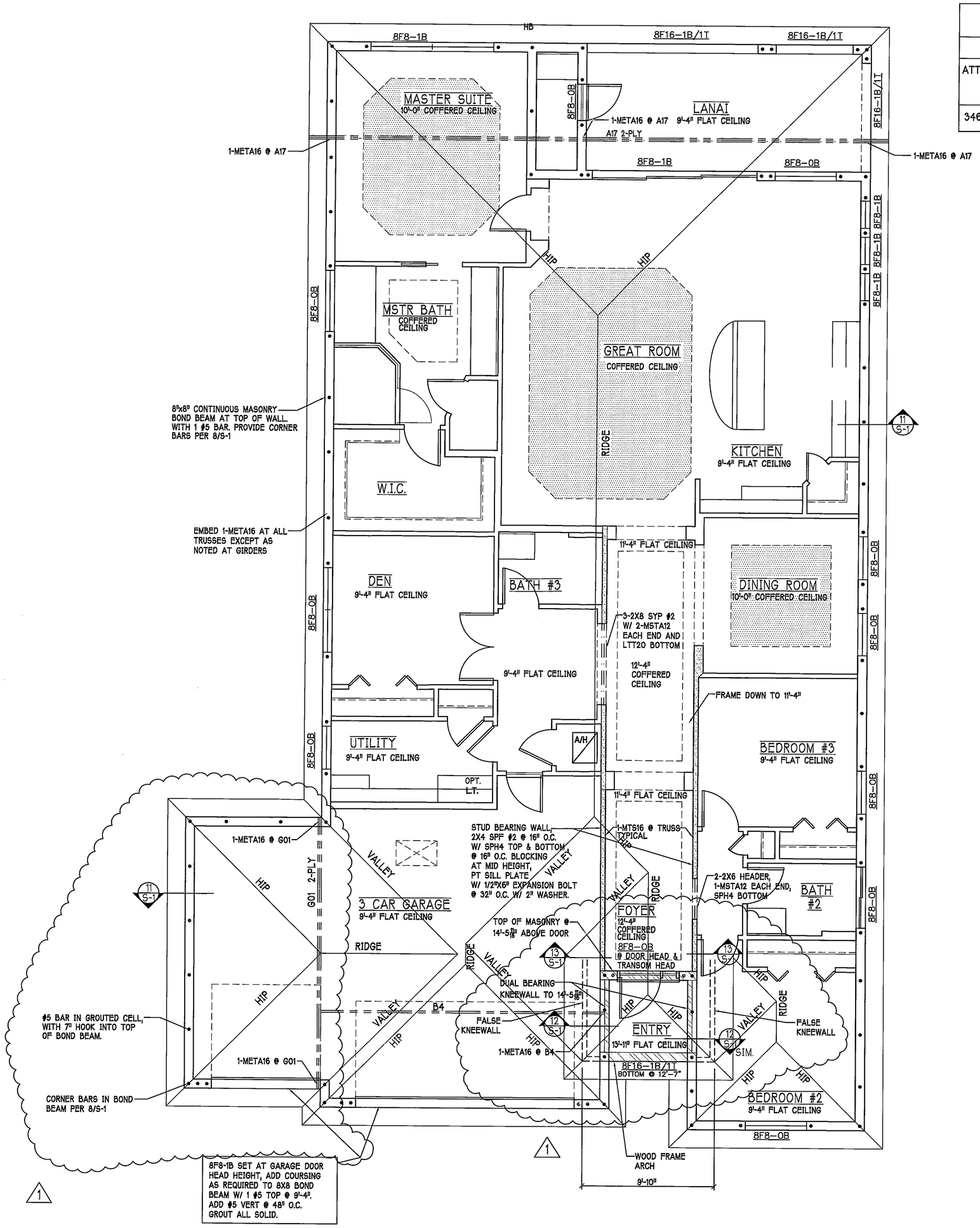


ROOF PLAN: "A" SCALE: 1/4" = 1'-0"

| ATTIC VENTILATION | | |
|---|---|---|
| | WITHOUT OFF RIDGE VENTS | WITH OFF RIDGE VENTS |
| ATTIC AREA | VENTILATION REQUIRED (ATTIC AREA 1/150) | VENTILATION REQUIRED (ATTIC AREA 1/300) |
| 3460 SQ. FT. | 23.0 SQ. FT. | 11.5 SQ. FT. |

TRUSS BEARING CONDITIONS AND STRAPPING IS BASED ON TRUSS LAYOUT PREPARED BY RAYMOND, JOB # 13075396, REVISED: 9/30/2013

1

BEARING HEIGHTS

- = BEARING @ 9'-4" A.F.F.
- = INTERIOR STUDBEARING @ 9'-4" A.F.F.
- = BEARING @ 13'-11" A.F.F.

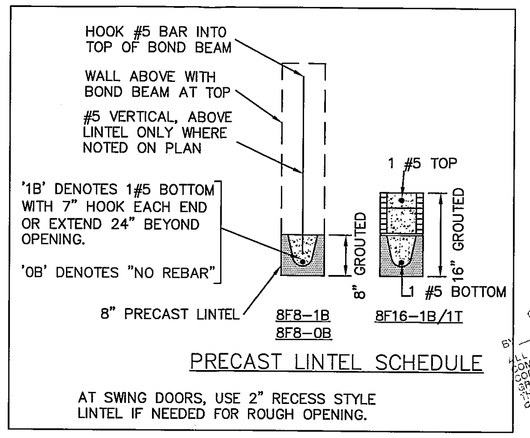


PRECAST LINTEL SCHEDULE

AT SWING DOORS, USE 2" RECESS STYLE LINTEL IF NEEDED FOR ROUGH OPENING.

REVIEWED FOR CODE COMPLIANCE CAPE CORAL BUILDING DIVISION BY VOS DATE 10-8-13
ALL CONSTRUCTION SHALL BE IN COMPLIANCE WITH THE FLORIDA BUILDING CODE, AS AMENDED. THIS REVIEW DOES NOT PERMIT THE VIOLATION OF ANY COUNTY, CITY OR FLORIDA LAW, NOR DOES IT PRESUME TO GIVE AUTHORITY TO VIOLATE OR CANCEL THE PROVISIONS OF ANY COUNTY, CITY OR FLORIDA LAW. APPROVAL BASED ON INFORMATION PROVIDED AND COMPLIANCE WITH ALL CODES AND ORDINANCES.

PLAN NOTES:
1) ROOF TRUSS BEARING ELEVATION VARIES, SEE LEGEND.
2) ROOF FRAMING SHALL BE WOOD TRUSSES DESIGNED BY A DELEGATED TRUSS ENGINEER PER DESIGN CRITERIA ON SHEET S-1.
3) PROVIDE STRAPPING AT TRUSSES PER NOTES ON THIS SHEET.
4) FOR NAILING OF ROOF DECK, SEE 1 AND 2 ON S-1.
5) 8F8-1B etc., DENOTES PRECAST LINTEL ABOVE DOOR/WINDOW OPENING PER SCHEDULE THIS SHEET.
6) AT TRUSS BEARING, PROVIDE 8x8 MASONRY BOND BEAM W/ 1 #5 CONTINUOUS, SEE DETAIL 2/A-6.

TRUSS STRAPPING TO MASONRY

INSTALL META16 AT ALL TRUSSES TO 1450 lb UPLIFT. FOR HIGHER UPLIFTS, SEE NOTES ON PLAN.

| MAX TRUSS UPLIFT @ 24" OC (LBS) | CONNECTOR | FASTENER |
|---|---|---|
| 1450 | (1)META16 TO 40 | 9–10dx1½", EMBED 4" |
| 1810 | (1)HETA16 TO 40 | 10–10dx1½", EMBED 4" |
| 2235 | (1)HHETA16 TO 40 | 12–10dx1½", EMBED 4" |
| 1985 (1 PLY) | (2)META12 TO 40 | 12–10dx1½", EMBED 4" |
| 1900 (2 PLY) | (2)META12 TO 40 | 14–16d, EMBED 4" |
| 2500 (2 PLY) | (2)HETA12 TO 40 | 14–16d", EMBED 4" |
| 2500 (2 PLY) | (2)HHETA12 TO 22 | 14–16d", EMBED 4" |

NOTES:
1) PROVIDE A STRAP FROM THE ABOVE LIST AT EACH ROOF TRUSS BEARING POINT, BASED ON THE TRUSS UPLIFT VALUES IN THE SIGNED AND SEALED TRUSS DESIGN PACKAGE AND SUITABLE FOR THE GEOMETRY. EMBED STRAP ON ℄ OF WALL.
2) CONNECTORS ARE SIMPSON STRONG TIE. ALL CONNECTORS SHALL BE INSTALLED IN STRICT ACCORDANCE WITH SIMPSON PRINTED INSTRUCTIONS. SUBSTITUTIONS MUST BE APPROVED IN WRITING BY THE ENGINEER OF RECORD.
3) WHERE EMBEDDED STRAPS ARE MISSING, OR MIS-LOCATED, INSTALL RETROFIT STRAP PER 10/S-1.

REV 2

DESIGN IN ACCORDANCE WITH THE FLORIDA BUILDING CODE 2010

D·R·HORTON America's Builder

Gulf Coast Drafting & Design
Phone (239) 540-1822
Fax (239) 540-7759

This signature and seal is for work performed by the Structural Engineer of Record (SER) related to Structural Engineering. No work was performed by the SER in other disciplines such as architectural, mechanical, plumbing, electrical, fire, life safety, accessibility, or any other work not specifically stated.

STRUCTURAL ENGINEERING
STRUCTURAL SYSTEMS OF NORTH FLORIDA
1624 SE 47th ST SUITE #3
CAPE CORAL, FL 33904
(239) 549-4954
CA# 8829

DERECK BERGEMEIER P.E.
OCT 10 2013
FL PE #0060592

LOT: 33 BLOCK:
SUBDIV: CELEBRATION CAPE
ADDRESS: 283 DESTINY CIRCLE
G.C.D. JOB #: 5061

MODEL: UNIT 2431
RESIDENCE FOR: SPEC

DATE: 8-19-13
DRAWN BY: GCH
CHECKED BY: JWC
REVISED: 1 10-8-2013
PLAN: ROOF
SCALE: 1/4"=1'-0"
SHEET# A-4

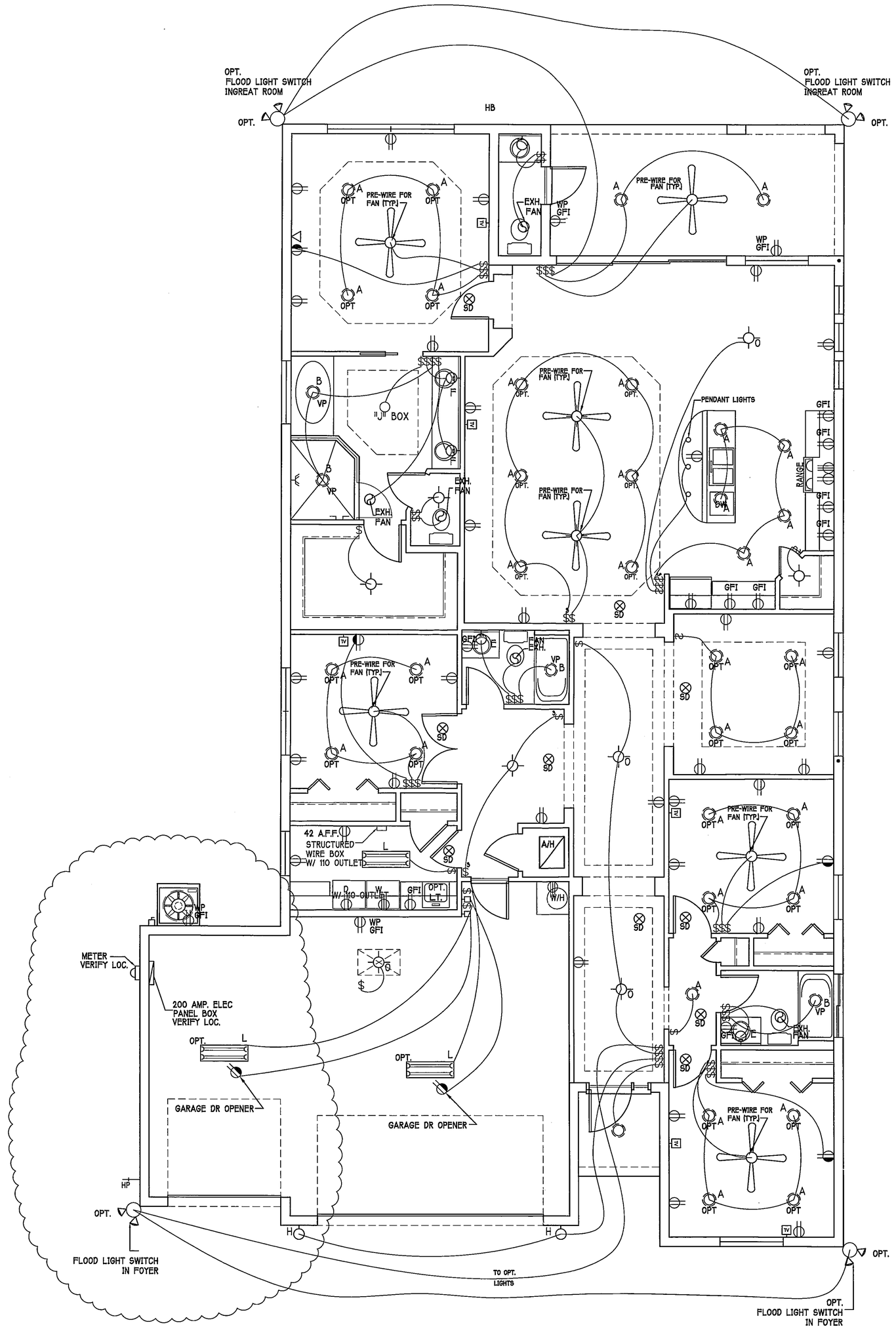


1

FLOOR ELECTRICAL PLAN: SCALE: 1/4" = 1'-0"

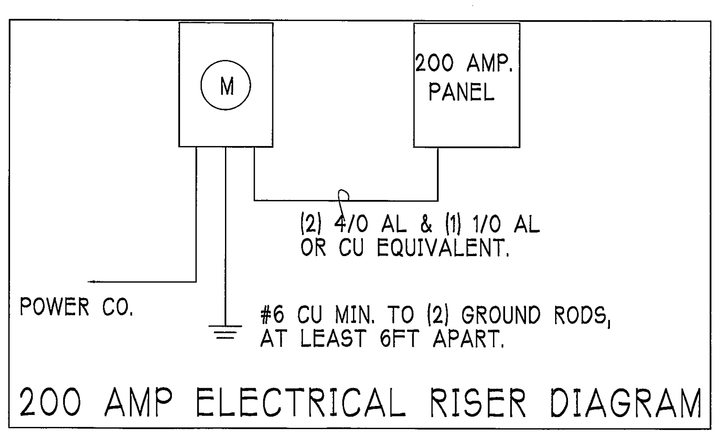


200 AMP ELECTRICAL RISER DIAGRAM

## ELECTRICAL LEGEND

| | |
|---|---|
| | ELECTRICAL METER |
| | ELECTRICAL PANEL |
| | 120 V JUNCTION BOX |
| | SINGLE RECEPTACLE OUTLET |
| | 220 V RECEPTACLE OUTLET |
| | 4-PLEX RECEPTACLE OUTLET |
| | DUPLEX RECEPTACLE OUTLET |
| | 1/2 SWITCHED DUPLEX OUTLET |
| | DUPLEX RECETACLE @ ELEV. A.F.F. |
| T | TIMER SWITCH |
| GFI | GFI SWITCH |
| P | DIMMER SWITCH |
| 3 | 3 WAY SWITCH |
| | SINGLE POLE SWITCH |
| SD | AC/DC SMOKE DETECTOR TO BE INTERCONNECTED ANY RESIDENT HAVING A FOSSIL-BURNING HEATER OR APPLIANCE, A FIREPLACE, OR AN ATTACHED GARAGE SHALL HAVE AN OPERATIONAL CARBON MONOXIDE ALARM INSTALLED WITHIN 10 FEET OF EACH ROOM USED FOR SLEEPING PERPOSES. PER RULE 9B-3.04.72 |
| | TELEPHONE OUTLET |
| TV | TELEVISION RECEPTION OUTLET |
| | SURFACE MOUNTED CEILING LIGHT |
| | RECESSED LIGHT |
| | WALL MTD. BRACKET LIGHT |
| | DUPLEX FLOOD LIGHT |
| | EXHAUST FAN |
| | TRACK MTD. LIGHTS |
| | A/C DISCONNECT |
| | PUSH BUTTON |
| DB | DOOR BELL |
| | KEYPAD |
| | 4' FLUORESCENT LIGHT |
| | 2' UNDER COUNTER LIGHT |

Electrical Notes:

Install Arc-Fault circuit-Interrupters & Tamper-Resistant Receptacles shall be installed in dwelling unit. per NEC 210.12 & 406.11

All electrical equipment to be set at or above base flood elevation.

All outlets in wet areas and all exterior outlets to be GFI's

Install Phone & T.V per contract .

INSTALL ALL ELECTRICAL PER NEC 2008

## OPTIONAL ELECTRICAL PLAN 2583

200 Amp Service

| TAG | QUANTITY | PRODUCT | PRODUCT # |
|---|---|---|---|
| A | (38) | Recessed Cans | |
| B | (4) | Vapors | |
| C | (1) | Pendant/Nook | P4070-09 |
| D | (X) | 10" Mushrooms | P3410-30 |
| E | (3) | 24" Avalon 3 LT | P3268-09 |
| F | (2) | 36" Avalon 4 LT | P3269-09 |
| G | (X) | NOT USED | NOT USED |
| H | (3) | Coach Lights | P5815-30 |
| J | (X) | Coach Lights | P5683-30 |
| K | (X) | J BOX | |
| L | (4) | 4' Fluorescent | P7186-30 |
| M | (3) | 2' Fluorescent | P7183-30 |
| N | (X) | 5lt Chandelier | P4068-09 |
| O | (1) | 3 LT Avalon | P3773-09 |
| P | (3) | Pendant Light | P-5068-09 |

DESIGN IN ACCORDANCE WITH THE FLORIDA BUILDING CODE 2010

D·R·HORTON America's Builder

Gulf Coast Drafting & Design
Phone (239) 540-1822
Fax (239) 540-7759

LOT: 33 BLOCK: SUBDIV: CELEBRATION CAPE ADDRESS: 283 DESTINY CIRCLE G.C.D. JOB #: 5061

MODEL: UNIT 2431 RESIDENCE FOR: SPEC

DATE: 8-19-13
DRAWN BY: GCH
CHECKED BY: JWC
REVISED: 1 10-8-2013
PLAN: ELECTRICAL
SCALE: 1/4" = 1'-0"
SHEET# A-5AB

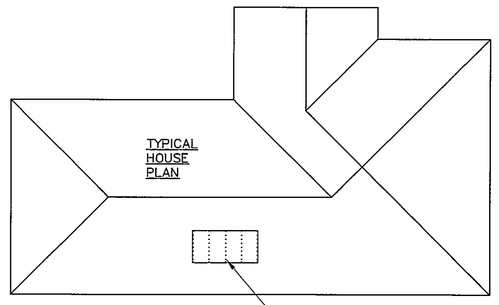


## 1 ROOF DECK NAILING PATTERN

SCALE: NTS

| SHEATHING SCHEDULE | |
|---|---|
| EXTERIOR STUD WALL | FLOOR |
| N/A | N/A |
| ROOF | LANAI / ENTRY CEILING |
| A.P.A. RATED SHEATHING, EXPOSURE 1, SPAN RATING 24/16 OR BETTER (HIGHER NUMBERS INDICATE BETTER SPAN RATING). THE USUAL CHOICE IS 15/32" CDX PLYWOOD OR 7/16" OSB, WITH THE REQUIRED APA GRADE MARKING. FASTEN WITH 8d RING SHANK NAILS @ 6" O.C. EDGE AND 6" O.C. FIELD. (RING SHANK NAILS PER R803.2.3.1: 0.113" NOMINAL SHANK DIAMETER, RING DIA. OF 0.012" OVER SHANK DIAMETER, 16 TO 20 RINGS PER INCH, 0.280" DIAMETER FULL ROUND HEAD, 2" NAIL LENGTH) | OPTIONS:<br>1) 1x4 STRIPPING @ 16"OC w/ 2–8d NAILS TO EACH TRUSS, 5/8" EXTERIOR GYPBOARD CEILING, FASTEN w/8d NAILS OR 1 5/8" DRYWALL SCREWS @ 6"OC EDGE & FIELD.<br>2) 3/8" BC PLYWOOD NAILED w/ 6d COMMON @ 6" OC EDGE & FIELD.<br>3) WIRE LATHE AND 1/2" STUCCO. FASTEN WIRE LATHE WITH GALVANIZED STAPLES BY SENCO OR EQUIV., 1" CROWN, 1" LONG, SPACED 4" OC. |

NOTE: EXTERIOR CEILINGS AND SOFFITS SPECIFIED HERE MEET THE DESIGN WIND PRESSURES PER R703.1.3.

## 2

| WINDOW/DOOR/SOFFIT DESIGN WIND PRESSURES | | |
|---|---|---|
| WIND PRESSURES PER ASCE7–10, 160 MPH, EXPOSURE B, AND CONVERTED TO ALLOWABLE STRESS DESIGN PRESSURES USING 0.6W LOAD FACTOR. (Vasd=124 MPH, RISK CAT II, ENCLOSED, kd=0.85, h<30') | | |
| TYPE | INTERIOR ZONE 4 | END ZONE 5 |
| SOFFIT | +27.7 –30.0 | +27.7 –37.0 |
| TYPICAL WINDOWS & DOORS | +27.7 –30.0 | +27.7 –37.0 |
| 8' OR 9' GARAGE DOORS | +24.3 –27.5 | |
| 16' OR 18' GARAGE DOORS | +23.3 –26.0 | |
| (SEE PLAN FOR OTHER SPECIFIC PRESSURES) | | |

1) TABLE MAY BE USED FOR ANY SIZE WINDOW OR DOOR IN EACH TYPE.
2) USE "INTERIOR ZONE 4" PRESSURES UNLESS WINDOW OR DOOR IS LOCATED WITHIN THE "END ZONE 5" (SEE DIAGRAM BELOW), THEN USE THE HIGHER PRESSURES UNDER THE "END ZONE 5" COLUMN.
3) ALL GLASS / GLAZING SHALL BE IMPACT RATED OR USE IMPACT RATED SHUTTERS.
4) SUBMIT PRODUCT APPROVALS TO THE BUILDING DEPARTMENT AS REQUIRED BY THE LOCAL JURISDICTION.
5) MANUFACTURED SOFFIT PRODUCTS SHALL BE INSTALLED PER MFR ENGINEERING SPEC SHEETS.

* ON IRREGULAR SHAPED BUILDINGS, THERE IS NO GUIDANCE IN THE CODE FOR HOW FAR A CORNER MUST PROTRUDE FROM THE MAIN BUILDING TO BE CONSIDERED 'ZONE 5'. WE HAVE CHOSEN >15'. THIS IS SUBJECT TO JUDGEMENT CALL BY THE AUTHORITY HAVING JURISDICTION.

IN ZONE 5, MANUFACTURED SOFFIT PRODUCTS MAY REQUIRE ADDITIONAL BATTONS OR FASTENING PER MFR ENGINEERING SPEC SHEETS TO MEET THE PRESSURE REQUIREMENTS.

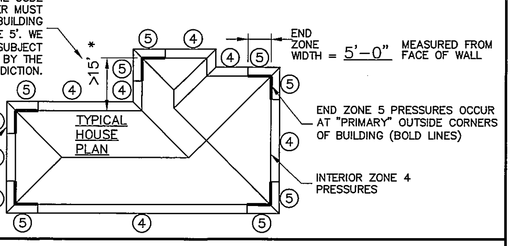


## 3

DESIGN CRITERIA:

DESIGN IN ACCORDANCE WITH REQUIREMENTS OF THE FLORIDA BUILDING CODE 2010 – RESIDENTIAL.

1. FLOOR & ROOF UNIFORM LOADS:
   ELEVATED FLOORS: LIVE LOAD 40 PSF, DEAD LOAD 20 PSF
   ROOF: LIVE TOP CHORD 20 PSF
   LIVE BOTTOM CHORD 10 PSF (NON–CONCURRENT w/ TCLL)
   CEMENT ROOF TILE DEAD LOAD 25 PSF TOTAL
   SHINGLE/METAL ROOFING DEAD LOAD 15 PSF TOTAL
   MINIMUM DEAD LOAD FOR WIND: TC 5 PSF, BC 5 PSF
   DEFLECTION CRITERIA:
   FLOOR L/480 LIVE, L/360 TOTAL
   ROOF L/240 LIVE, L/180 TOTAL
2. WIND LOADS:
   WIND DESIGN PER, ASCE7–10
   BASIC WIND SPEED (ASCE7–10) 160 MPH
   NOMINAL WIND SPEED (Vasd TABLE R301.2.1.3) 124 MPH
   BUILDING CATEGORY II
   IMPORTANCE FACTOR 1.00
   EXPOSURE B
   MEAN ROOF HEIGHT < 30 FT
   ROOF PITCH 5/12
   ENCLOSURE CLASS. ENCLOSED
   INTERNAL PRES. COEFF. +/– 0.18
   WINDOW/DOOR DESIGN WIND PRESSURE, SEE TABLE IN DETAIL 3.
   SOFFITS – PER R703.1.3. ALL SOFFITS SHALL BE CAPABLE OF RESISTING THE DESIGN PRESSURES SPECIFIED IN TABLE R301.2(2) FOR WALLS. PER R616.4, SOFFIT TESTING SHALL USE ASCE7 DESIGN PRESSURES USING 0.6W LOAD FACTOR.
3. REINFORCED CONCRETE:
   DESIGN AS PER ACI 318–05
   REQUIRED COMPRESSIVE STRENGTH AT 28 DAYS:
   SLAB ON GRADE f'c = 2500 PSI
   3 1/4" MINIMUM THICKNESS REINFORCED WITH 6x6 w1.4xw1.4 WWF OR FIBERMESH.
   CONVENTIONAL SHALLOW FOOTINGS f'c = 2500 PSI
   BEAMS AND COLUMNS f'c = 3000 PSI
   ALL OTHER CONCRETE (U.N.O.) f'c = 3000 PSI
   UNLESS OTHERWISE SHOWN ON DRAWINGS, MINIMUM CONCRETE COVER FOR REINFORCING SHALL BE AS FOLLOWS:
   FOOTINGS 3"
   SLAB ON GRADE CENTERED
   BEAMS 1 1/2"-
   COLUMNS 1 1/2"-
   ALL REINFORCING STEEL SHALL BE PLACED IN ACCORDANCE WITH THE TYPICAL BENDING DIAGRAMS AND PLACING DETAILS OF ACI STANDARDS AND SPECIFICATIONS. ALL REINFORCING STEEL SHALL BE HELD SECURELY IN POSITION WITH STANDARD ACCESSORIES DURING PLACING OF CONCRETE.
   REINFORCING STEEL – ASTM A615 GRADE 40 FOR #3
   GRADE 60 FOR #4 TO #11
   WELDED WIRE FABRIC – ASTM A185
   SPLICES IN REINFORCING, SHALL BE 40 BAR DIAMETERS. NON–CONTACT LAP SPLICES MAY BE USED PROVIDED REINFORCING IS NOT SPACED MORE THAN 5" APART FOR #5 BARS.
   FORMWORK AND SHORING SHALL REMAIN IN PLACE UNTIL CONCRETE HAS REACHED AT LEAST 2/3 OF THE REQUIRED 28 DAY STRENGTH.
4. REINFORCED MASONRY:
   DESIGN PER ACI 530–05
   REQUIRED COMPRESSIVE STRENGTHS:
   MASONRY WALLS f'm = 1500 PSI
   REINFORCING STEEL – ASTM A615 GRADE 60.
   SPLICES IN REINFORCING, SHALL BE 48 BAR DIAMETERS.
   ALL CONCRETE MASONRY UNITS SHALL BE COMPOSED OF ASTM C90, GRADE N–1, HOLLOW CONCRETE MASONRY UNITS WITH TYPE 'S' MORTAR. GROUT ALL CELLS CONTAINING VERTICAL REINFORCEMENT WITH 3000 PSI PEA ROCK CONCRETE GROUT. ALL CELLS BELOW FINISHED GRADE SHALL BE GROUTED SOLID. ALL EXTERIOR WALLS SHALL BE REINFORCED FULL HEIGHT AT DOT LOCATIONS ON PLAN. PROVIDE HORIZONTAL JOINT REINFORCEMENT IN WALLS AT 16" OC VERTICALLY, UNLESS NOTED OTHERWISE. IN ADDITION, INSTALL JOINT REINFORCING IN THE FIRST TWO MORTAR JOINTS ABOVE AND BELOW OPENINGS, EXTENDING AT LEAST 24" BEYOND THE OPENING. LAP JOINT REINFORCING 6" MINIMUM.
5. DELEGATED–ENGINEERED WOOD ROOF & FLOOR TRUSSES:
   ALL WOOD ROOF AND FLOOR TRUSSES SHALL BE DESIGNED BY A DELEGATED TRUSS ENGINEER PER RULE 61G15–31.003 OF THE FLORIDA ADMINISTRATIVE CODE. ALL TRUSSES SHALL HAVE TEMPORARY BRACING PER "COMMENTARY AND RECOMMENDATIONS FOR HANDLING, INSTALLING AND BRACING METAL PLATE CONNECTED WOOD TRUSSES, HIB–91." FOR OTHER BRACING REQUIREMENTS, NOTIFY ENGINEER. PROVIDE PERMANENT BRACING PER TRUSS MFR. SHOP DRAWINGS. IF PERMANENT BRACING IS NOT SPECIFIED, CONTACT ENGINEER.
6. FOUNDATION:
   CONVENTIONAL SHALLOW CONCRETE FOOTINGS
   SOIL BEARING CAPACITY 2000 PSF
   THE CONTRACTOR SHALL BE RESPONSIBLE FOR DETERMINING THE SUITABILITY OF THE SOIL CONDITIONS FOR THE INTENDED STRUCTURE AND ASSUMED SOIL BEARING CAPACITY. IT IS RECOMMENDED THAT A GEOTECHNICAL FIRM BE HIRED TO PERFORM A SITE EVALUATION.
7. DIMENSIONS: VERIFY ALL DIMENSIONS WITH HOUSE PLANS. SEE HOUSE PLANS, MECHANICAL, ELECTRICAL AND PLUMBING DRAWINGS FOR EMBEDS, OPENINGS, SLEEVES, ETC. WHICH ARE NOT SHOWN ON STRUCTURAL DRAWINGS.
8. MEANS AND METHODS: THE STRUCTURAL ENGINEER SHALL NOT HAVE CONTROL OR BE RESPONSIBLE FOR CONSTRUCTION MEANS, METHODS, TECHNIQUES, PROCEDURES, OR SEQUENCES TEMPORARY BRACING, SHORING, GUYING OR OTHER MEANS TO SUPPORT STRUCTURAL ELEMENTS IN PLACE DURING CONSTRUCTION, FOR THE ACTS OR OMISSIONS OF THE CONTRACTOR, OR ANY OTHER PERSONS PERFORMING THE WORK OR FOR THE FAILURE OF ANY OF THEM TO CONSTRUCT THE WORK IN ACCORDANCE WITH THE CONTRACT DOCUMENTS.
9. SHOP DRAWINGS: SHOP DRAWINGS SHALL BE PREPARED AND SUBMITTED TO THE ENGINEER FOR REVIEW FOR ALL STRUCTURAL ELEMENTS UTILIZING PREFABRICATED COMPONENTS. ONE SET OF SIGNED & SEALED TRUSS ENGINEERING SHALL BE DELIVERED TO THE ENGINEER OF RECORD FOR THE STRUCTURE PER FLORIDA ADMINISTRATIVE CODE 61G15–30.005 AND 61G15–31.003.

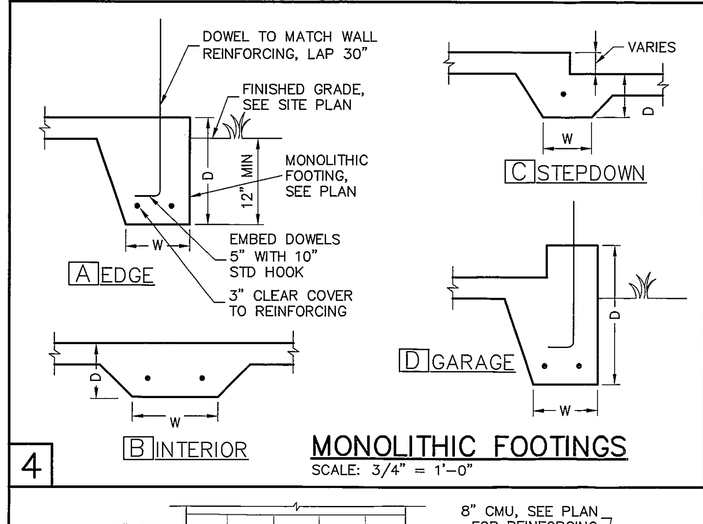


## 4 MONOLITHIC FOOTINGS

SCALE: 3/4" = 1'–0"

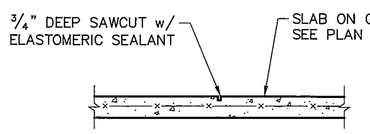


NOTES:
1) PROVIDE SAWCUTS TO CREATE APPROXIMATE 20' X 20' MAXIMUM SQUARES.
2) SAWCUT CONCRETE SLAB WITHIN 4 TO 12 HOURS OF CONCRETE PLACEMENT.

## 5 SLAB SAWCUT DETAIL

SCALE: NTS

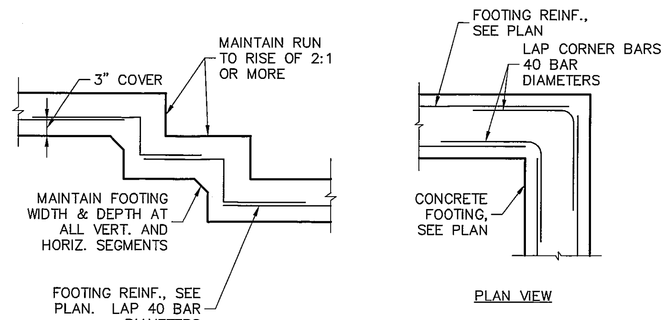


## 6 STEP FOOTING

SCALE: NTS

## FOOTING CORNER BARS

SCALE: NTS

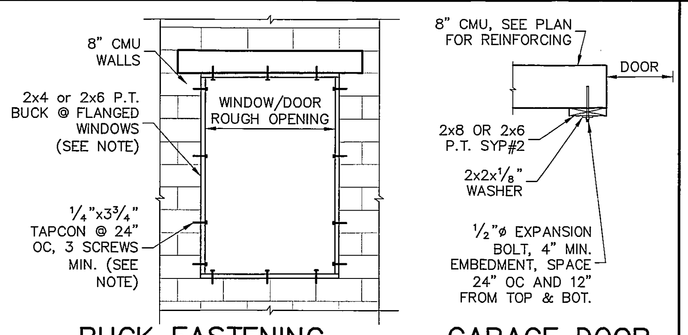


## BUCK FASTENING

## GARAGE DOOR

NOTE: THIS BUCK FASTENING DETAIL IS INTENDED FOR FLANGED WINDOW/DOOR PRODUCTS THAT FASTEN THRU THE FLANGE WITH WOOD SCREWS TO THE BUCK. FOR WINDOW/DOOR PRODUCTS THAT DO NOT HAVE A FLANGE AND FASTEN INSTEAD OUTWARD THRU THE FRAME, USE MASONRY SCREWS PER MFR. THAT ARE LONG ENOUGH TO PENETRATE 2–1/4" INTO THE MASONRY. IN THIS CASE, THE BUCK MATERIAL IS SIMPLY A SPACER AND MAY BE 1x4 OR 1x6 OR OMITTED ENTIRELY AND THE SPACER MAY BE TACKED IN PLACE WITH MASONRY NAILS OR PINS.

## 7

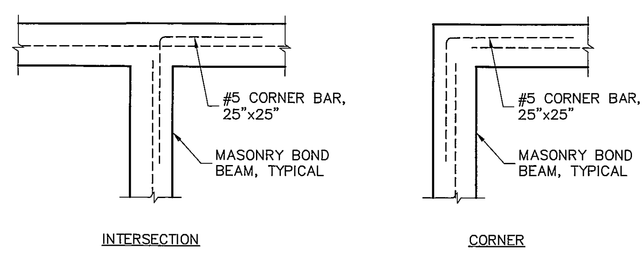


## 8 CORNER BAR DETAIL IN BOND BEAMS

SCALE: 3/4" = 1'–0"

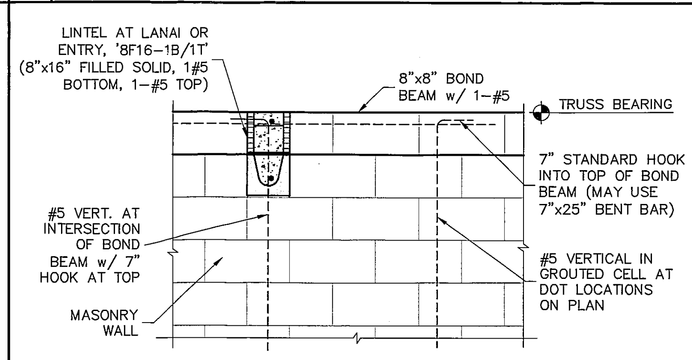


## 9 BOND BEAM REINFORCING DETAIL

SCALE: 3/4" = 1'–0"

| RETROFIT STRAPS TO CONCRETE/MASONRY | | |
|---|---|---|
| TRUSS UPLIFT (LBS) @ 24" OC | CONNECTOR | |
| TO 840 | 1–MTSM16 or 20 | 7–10dx1 1/2", 4–1/4"x2 1/4" TITEN |
| TO 1045 | 1–HTSM16 or 20 | 8–10dx1 1/2", 4–1/4"x2 1/4" TITEN |
| TO 2090 | 2–HTSM16 or 20 | 8–10dx1 1/2", 4–1/4"x2 1/4" TITEN |
| TO 4300 | 2–LGT2 | 16–16d, 7–1/4"x2 1/4" TITEN |
| TO 3480 | HTT16 | 18–16d, 5/8"ø ALLTHREAD, DRILL & EPOXY 10" EMBED w/ SIMPSON SET. |
| TO 10530 | HGT–2/3 | TWO 3/4"ø ALTHREAD, DRILL & EPOXY 12" EMBED WITH SIMPSON SET. |

NOTES:
1) WHERE EMBEDDED STRAP IS MISSING OR MIS–LOCATED, PROVIDE A STRAP FROM THE ABOVE LIST AT EACH ROOF TRUSS BEARING POINT, BASED ON THE TRUSS UPLIFT VALUES IN THE SIGNED AND SEALED TRUSS DESIGN PACKAGE.
2) CONNECTORS ARE SIMPSON STRONG TIE. ALL CONNECTORS SHALL BE INSTALLED IN STRICT ACCORDANCE WITH SIMPSON PRINTED INSTRUCTIONS.

## 10 RETROFIT UPLIFT CONNECTOR SCHEDULE

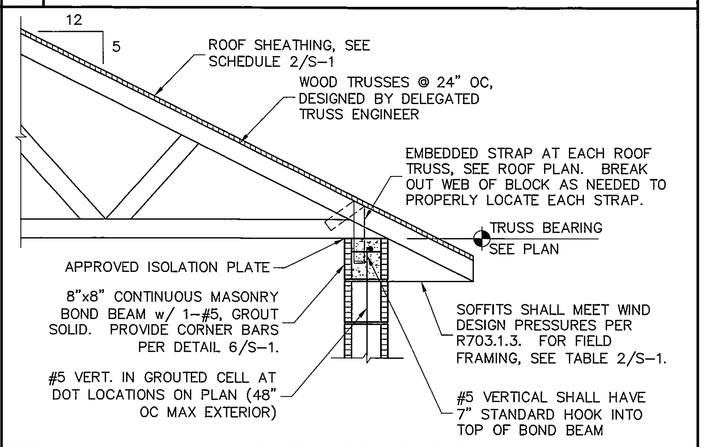


## 11 TRUSS STRAP TO BOND BEAM

SCALE: 3/4" = 1'–0"

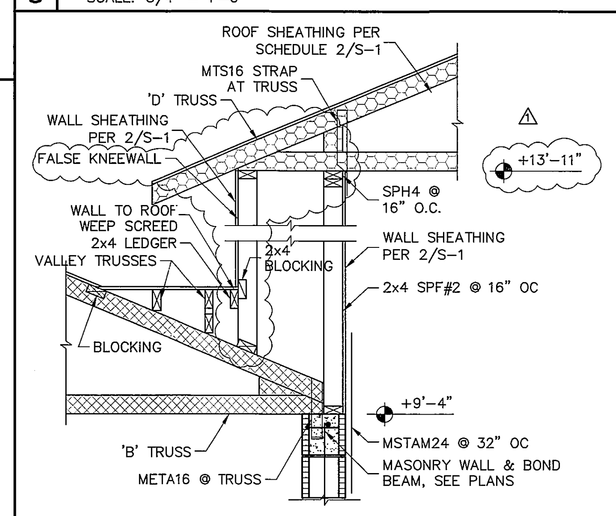


## 12 KNEEWALL AT ENTRY

SCALE: 3/4" = 1'–0"

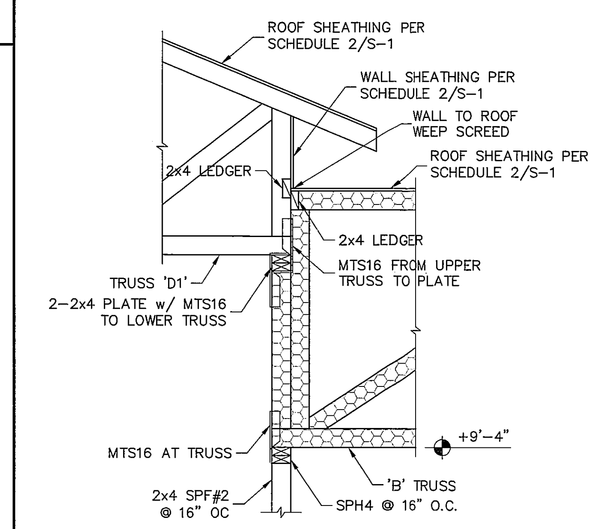


## 13 STRAPPING AT FOYER TRUSSES

SCALE: 3/4" = 1'–0"

| REVISIONS | BY |
|---|---|
| 1 10/09/13 | DWB |

STRUCTURAL ENGINEERING:
STRUCTURAL SYSTEMS OF NORTH FLORIDA
1634 S.E. 47th STREET, SUITE A3
CAPE CORAL, FL 33904
(239) 549–4554
CA# 8829

DENIS P. BERGENDER P.E.
OCT 10 2013
FL PE #39562

D.R.HORTON America's Builder

DESIGN PER FLORIDA BUILDING CODE 2010

STRUCTURAL DETAILS
MODEL 2431 A
283 DESTINY CIRCLE
CAPE CORAL, FLORIDA
LOT: 33 SUBDIVISION: CELEBRATION CAPE

REVIEWED FOR CODE COMPLIANCE CAPE CORAL BUILDING DIVISION
BY ZSL DATE 10/21/13
ALL CONSTRUCTION SHALL BE IN COMPLIANCE WITH THE FLORIDA BUILDING CODE, AS OF 1/1/2010. CODE NOT RELIEVE THE CONTRACTOR OF RESPONSIBILITY TO COMPLY WITH ALL CODES AND ORDINANCES.

OCT 15 2013
FOR RAYMOND TRUSSES

| | |
|---|---|
| DESIGN/DRAWN | DWB/DWB |
| CHECKED | DWB |
| DATE | 08/19/13 |
| SCALE | VARIES |
| JOB NO. | DR5061 |
| SHEET | S–1 |

SHEET 1 OF 1