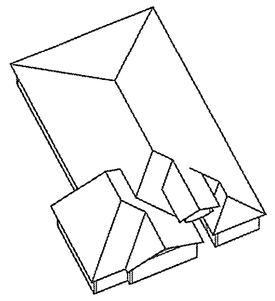

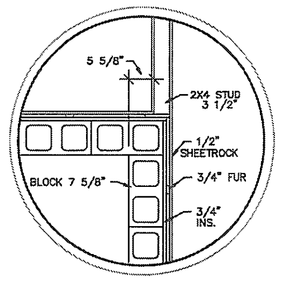

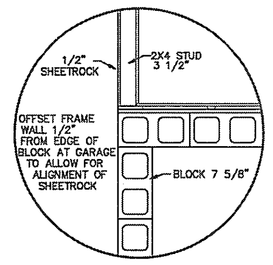

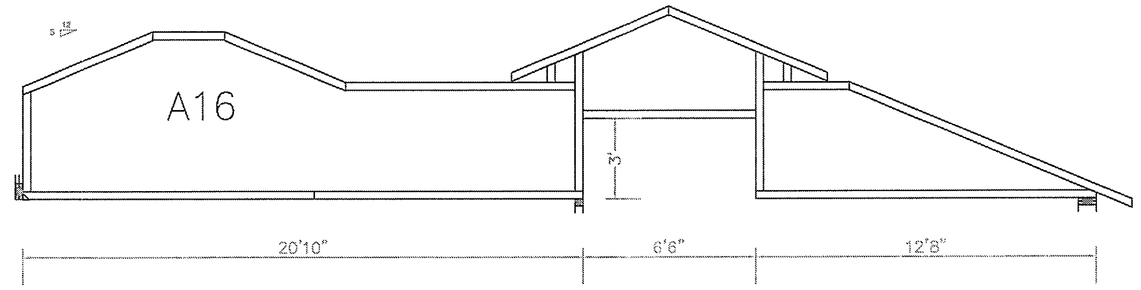

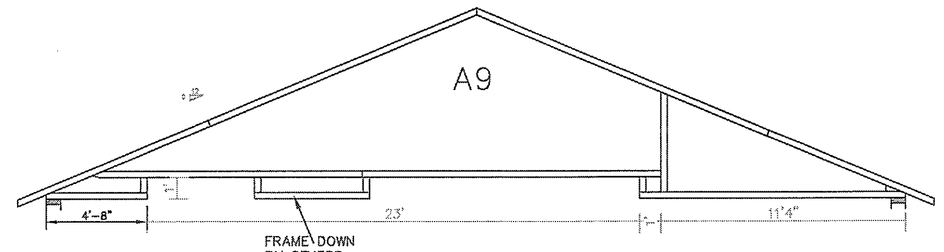

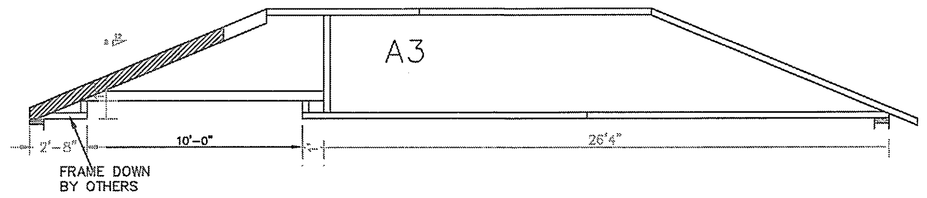

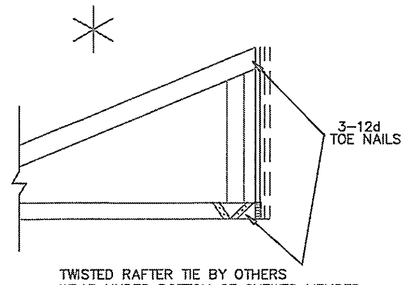

TWISTED RAFTER TIE BY OTHERS
WRAP UNDER BOTTOM OF SKEWED MEMBER
WRAP OVER BOTTOM CHORD OF SUPPORTING
MEMBER(S) & DOWN BACK FACE.
FASTEN W/ 5-12d NAILS TO EACH.

TYPICAL JACK CUTS

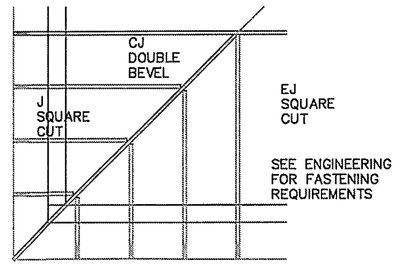

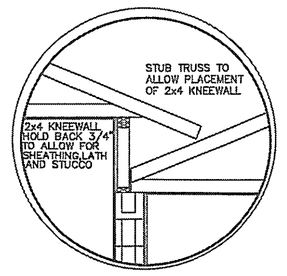

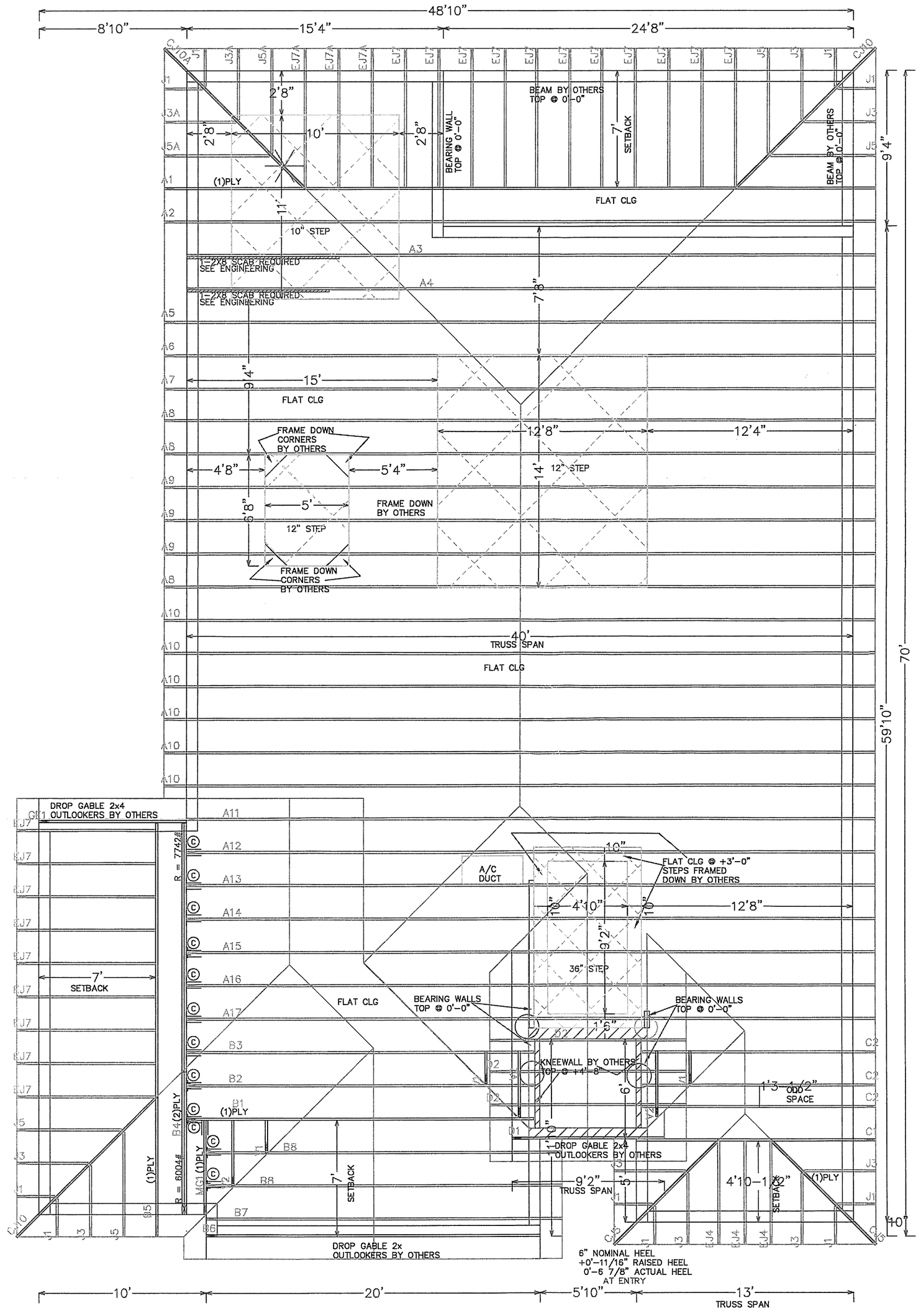

DESIGN CRITERIA

LANAI AND ENTRY ARE EXPOSED TO WIND AND DESIGNED PER CRITERIA SHOWN

TOP CHORD LIVE LOAD		20
TOP CHORD DEAD LOAD		20
BOTTOM CHORD LIVE LOAD	NON-CONCURRENT	10#
BOTTOM CHORD DEAD LOAD		10
TOTAL LOAD		50
DURATION FACTOR		1.25
WIND DESIGN SPEED (MPH)		160
ASCE 7-10 CAT II EXP B MWFRS CLOSED		IW=N/A
MAX. WALL HT FOR WIND LOAD		14'-0"

TILE

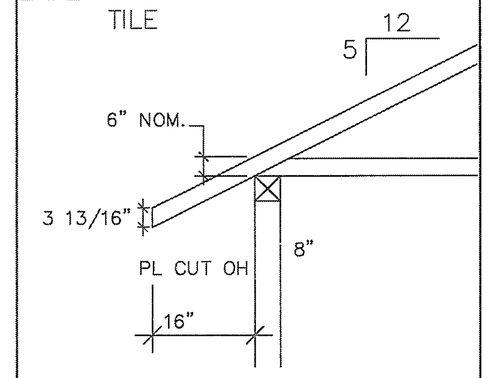

TYPICAL END DETAIL

UNLESS NOTED

REACTION VALUES ARE UNDER 5000#

UPLIFT VALUES ARE UNDER 1000#

ALL TRUSSES 24"o.c. UNLESS NOTED OTHERWISE

********CAUTION********

DO NOT ATTEMPT TO ERECT TRUSSES WITH-OUT REFERRING TO THE ENGINEERING DWGS.

IT IS NECESSARY TO REFER TO THE ENGINEERING DRAWINGS FOR NUMBER OF MEMBERS, BEARING LOCATION, ORIENTATION AND WEB BRACING

REFER TO WTCA/TPI BSCI-B1 SUMMARY SHEET FOR HANDLING METHODS & TEMPORARY BRACING, WHICH IS ALWAYS REQUIRED

BEARING HEIGHTS BASED ON PLANS PROVIDED TO SCOSTA CORP. "+/-" BEARING DIFFERENCES SHOWN ARE CRITICAL. IF ANY HEIGHTS DEVIATE – INFORM SCOSTA CORP.

BEARING WALL & BEAM HEIGHTS

9'-4" A.F.F.	0'-0"	ELEV.
14'-0" A.F.F.	+4'-8"	ELEV.
		ELEV.
		ELEV.
		ELEV.
		ELEV.
		ELEV.

TYPICAL HANGER SCHEDULE

C	SIMPSON HUS 26 OR ITW AHU 26	M	SIMPSON HGUS 28-3 OR ITW AGUS 28-3T
F	SIMPSON HUS 28 OR ITW AHU 28	N	SIMPSON HHUS 48 (SY42 FLOOR) OR ITW AHU48
H	SIMPSON HGUS 28 OR ITW AGUS 28	P	SIMPSON LUS 24 OR ITW STP 24
I	SIMPSON HGUS 28-2 OR ITW AGUS 28-2T	B	SIMPSON THA 422 (SY42 FLOOR) OR ITW ATH422
W		X	

HANGER VALUES HAVE BEEN BASED ON 16D COMMON NAILS EXCEPT THE FOLLOWING
LUS24 – 10D COMMON THJA26 – 10D x 1-1/2

*******ATTENTION*******

APPROVAL OF THIS TRUSS LAYOUT IS NECESSARY BEFORE FABRICATION CAN BEGIN. VERIFY DIMENSIONS, PITCHES, OVERHANGS, ELEVATIONS, CEILING & BEARING CONDITIONS. SCOSTA CORPORATION IS RESPONSIBLE FOR ACCURACY IN ACCORDANCE WITH PLANS AND/OR INFORMATION PROVIDED BY CUSTOMER, WITH ANY DEVIATIONS NOTED HEREIN. CUSTOMER IS RESPONSIBLE TO VERIFY ACCURACY OF INFORMATION AND PLANS PROVIDED TO SCOSTA CORPORATION, AND TO VERIFY CONFORMANCE TO FIELD CONDITIONS, AND/OR OWNER CHANGES. TRUSSES WILL BE BUILT IN ACCORDANCE WITH THE APPROVED LAYOUT.

APPROVED BY: _____

DATE: _____ REQUESTED DELIVERY DATE: _____

JOBSITE CONTACT NAME: _____

PHONE #: _____

REVIEWED FOR CODE COMPLIANCE CAPE CORAL BUILDING DIVISION
BY DGT DATE 7/23/14
ALL CONSTRUCTION SHALL BE IN COMPLIANCE WITH THE FLORIDA BUILDING CODE, ALL STATE AND LOCAL CODES. THE GRANTING OF A PERMIT DOES NOT RELIEVE THE CONTRACTOR OF RESPONSIBILITY TO COMPLY WITH ALL CODES AND ORDINANCES

Engineer of Record for the Structure
Structural Systems of N. FL, Inc.
Derek Bergener, PE # 58552
1634 SE 47th Street # 3
Cape Coral, FL 33904
Sign: _____ Date: 7/23/14
Reviewed for conformance with the design intent of the structure and specified design criteria.
☐ Accepted As is ☐ Accepted As noted ☐ Revise and Resubmit

SCOSTA CORP.

WOOD, STEEL OR TIMBER ROOF & FLOOR TRUSSES

3670 COMMERCE CENTER DRIVE
SEBRING, FL 33870
(863) 385-8242

SCALE:	DATE:	REVISED BY:	DRAWN BY:
1/4"=1'-0"	06/26/14		KRISTY
JOB ADDRESS: 1983 B & D 3 CAR LEE			1 OF 1
CUSTOMER: D.R. HORTON			JOB #: 44223B3

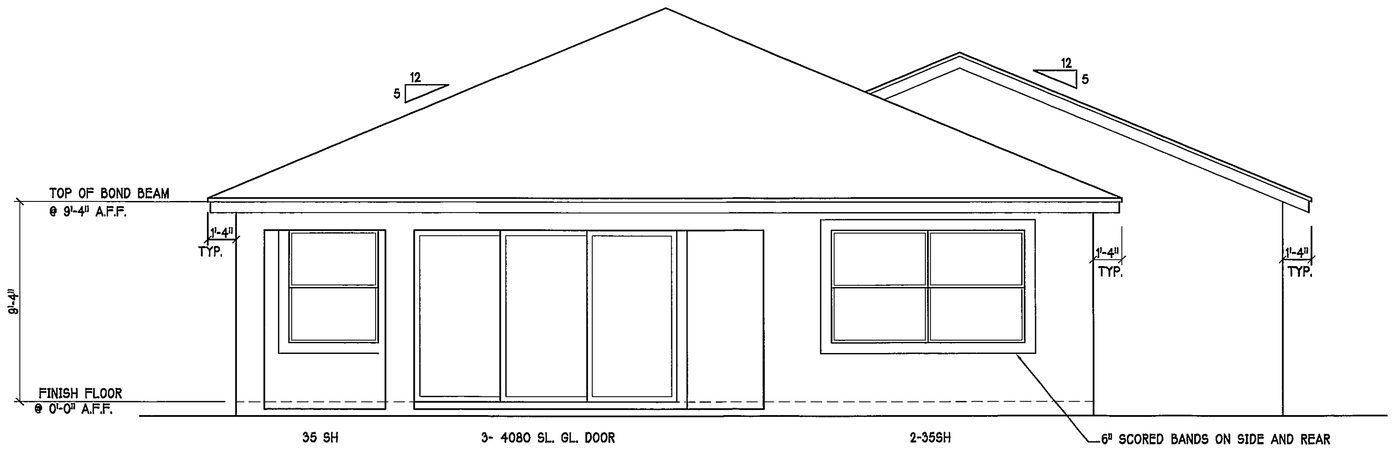

REAR ELEVATION: "B" SCALE: 1/4" = 1'-0"

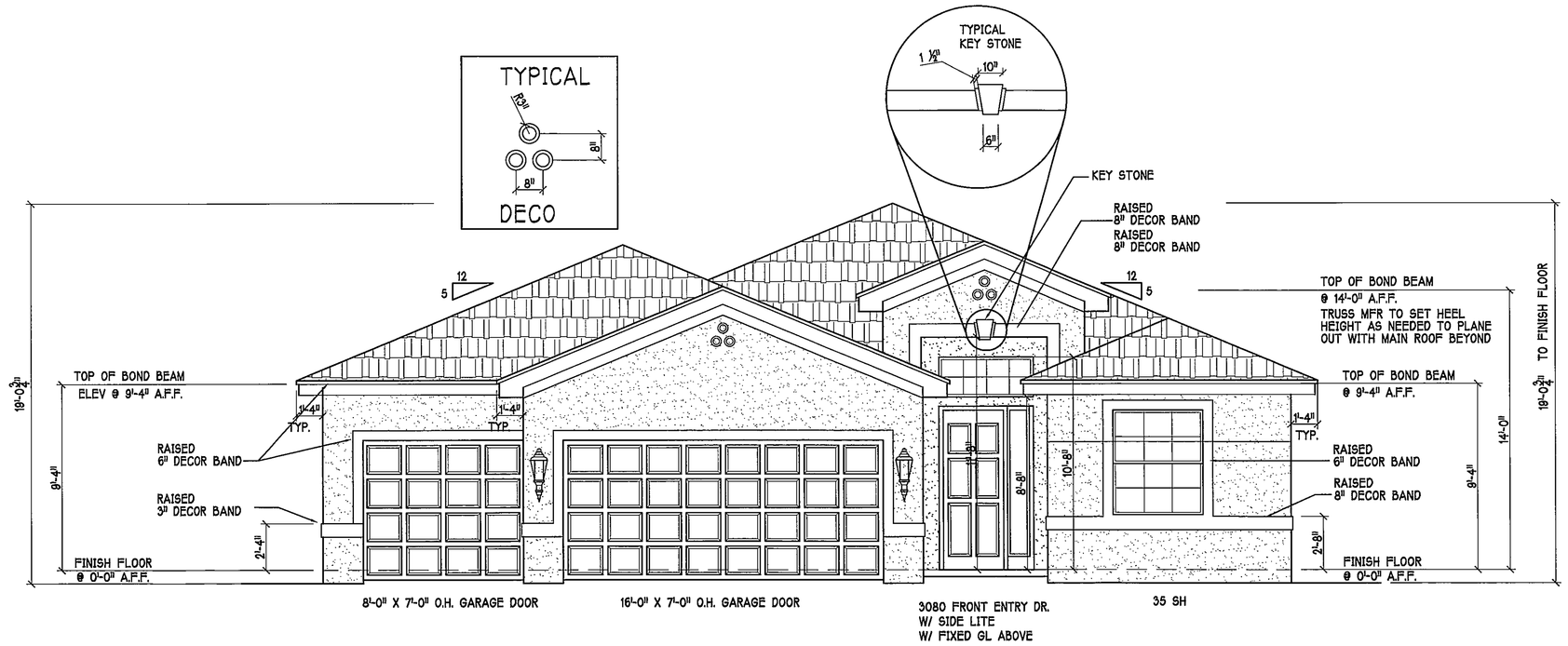

FRONT ELEVATION: "B" SCALE: 1/4" = 1'-0"

NOTE: CROWN BANDING MUST RETURN 10'-0" ON SIDE ELEVATION & RETURN TO ENTRY

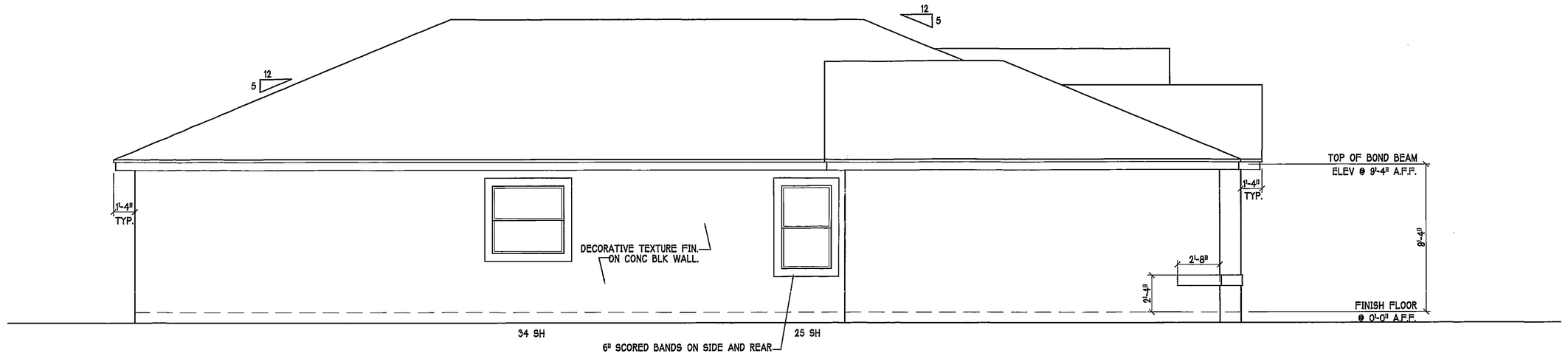

LEFT SIDE ELEVATION: "B" SCALE: 1/4" = 1'-0"

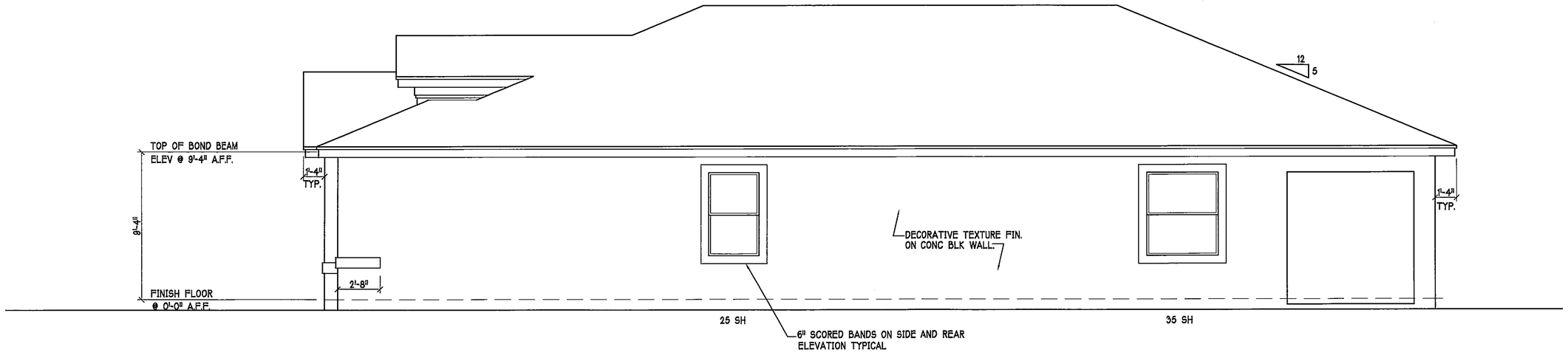

RIGHT SIDE ELEVATION: "B" SCALE: 1/4" = 1'-0"

REVIEWED
FOR CODE COMPLIANCE
CAPE CORAL BUILDING DIVISION
BY _____ DATE 8/1/14
ALL CONSTRUCTION SHALL BE IN COMPLIANCE WITH THE FLORIDA BUILDING CODE. ALL CHANGES MUST BE APPROVED BY THE CODE OFFICIAL PRIOR TO CONSTRUCTION. THE ISSUANCE OF A PERMIT DOES NOT ALLOW TO DEVIATE FROM THE CODE OR ANY OTHER ORDINANCE. THE CONTRACTOR SHALL BE RESPONSIBLE TO COMPLY WITH ALL OTHER LAWS AND ORDINANCES.

DESIGN IN ACCORDANCE WITH
THE FLORIDA BUILDING CODE 2010

D·R·HORTON America's Builder

Gulf Coast Drafting
& Design
Phone (239) 540-1822
Fax (239) 540-7759

This signature and seal is for work performed by the Structural Engineer of Record (SER) related to Structural Engineering only. No work was performed by the SER in other disciplines such as architectural, civil, electrical, electronic, fire, life safety, mechanical, plumbing, process, and telecommunications.

STRUCTURAL ENGINEERING
STRUCTURAL SYSTEMS OF NORTH FLORIDA
1634 SE. 47th ST. SUITE #3
CAPE CORAL, FL. 33904
(239) 574-5555
CAR 8829

DERICK PEDERSENER P.E.
JUL 23 2014
FL PE #50532

LOT: 15 BLOCK : 7007
SUBDIV: CELEBRATION CAPE
ADDRESS: 211 DESTINY CIRCLE
G.C.D. JOB # : 7977

MODEL: UNIT 1983
RESIDENCE FOR: SPEC

DATE: 7-22-14
DRAWN BY: GCH
CHECKED BY: JWC
REVISED:
PLAN: ELEVATION
SCALE: 1/4" =1'-0"
SHEET# A-1B

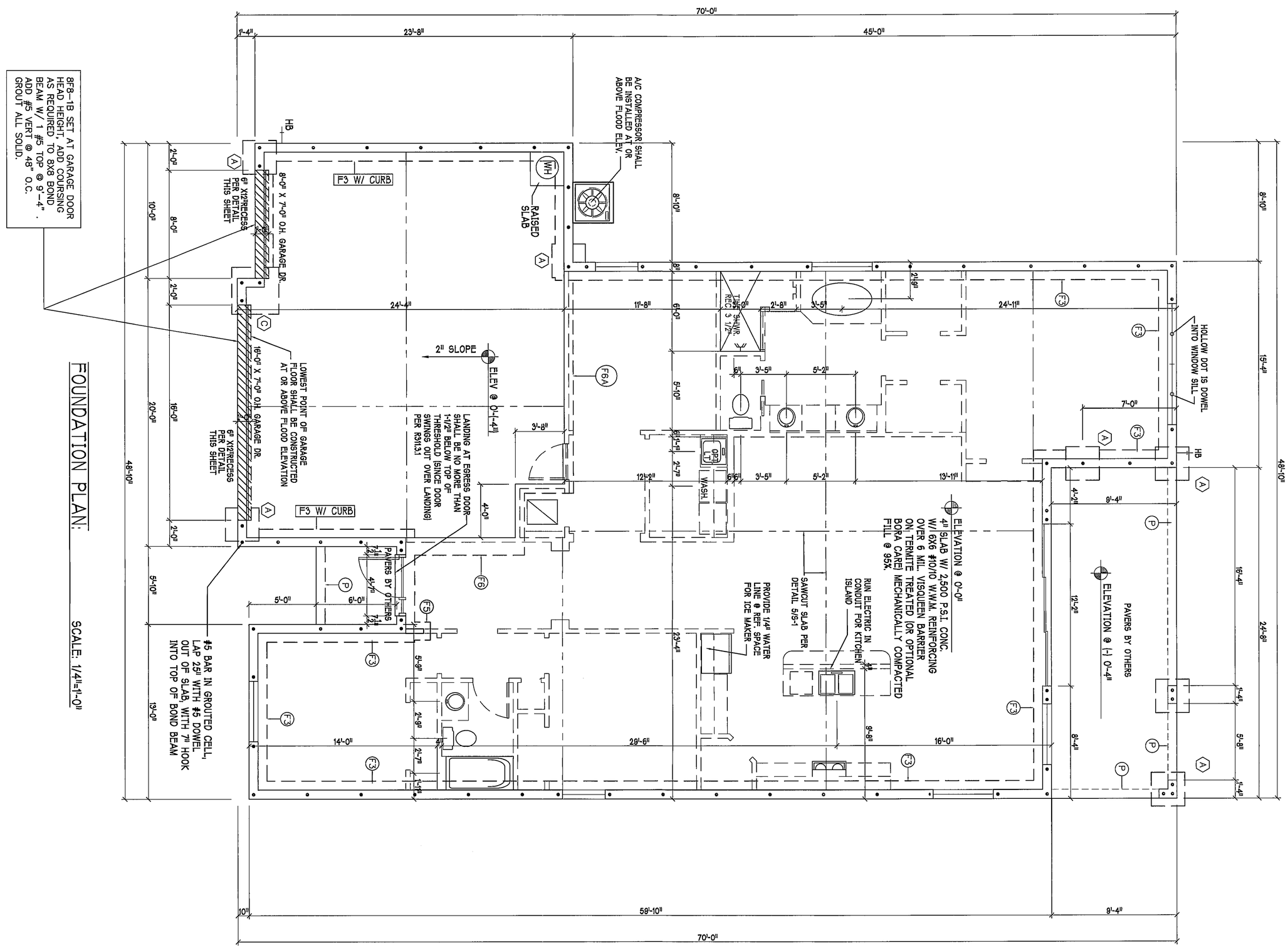

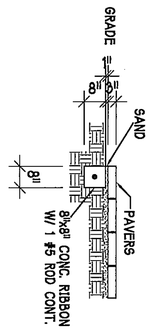

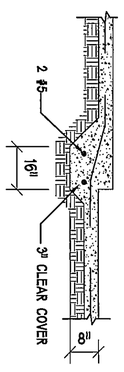

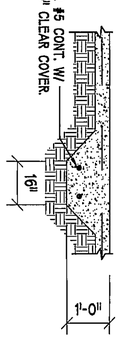

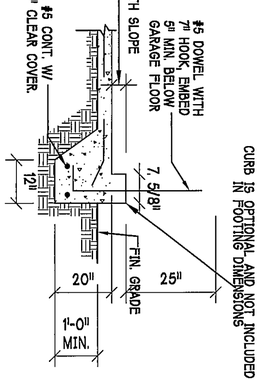

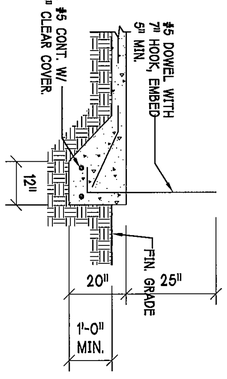

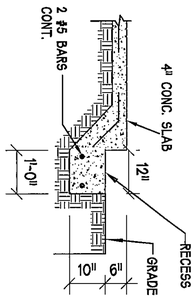

USED	TYPE	LENGTH	WIDTH	DEPTH	BOTTOM REINF. LONG WAY	BOTTOM REINF. SHORT WAY	REMARKS
☒	A	2'-6"	2'-6"	1'-0"	3-#5	3-#5	–
	B	3'-0"	3'-0"	1'-0"	4-#5	4-#5	–
	C	3'-6"	3'-6"	1'-0"	4-#5	4-#5	–
	D	4'-0"	4'-0"	1'-2"	5-#5	5-#5	–
	E	5'-0"	5'-0"	1'-2"	6-#5	6-#5	–

PAD FOOTING SCHEDULE

48'-10"
8'-10"
15'-4"
24'-8"
16'-4"
1'-4"
5'-8"
1'-4"
HOLLOW DOT IS DOWEL INTO WINDOW SILL
HB
A
F3
7'-0"
P
PAVERS BY OTHERS
ELEVATION @ (-) 0'-4"
9'-4"
4'-2"
12'-2"
8'-4"
24'-1"
ELEVATION @ 0'-0"
4" SLAB W/ 2,500 P.S.I. CONC. W/ 6X6 #10/10 W.W.M. REINFORCING OVER 6 MIL. VISQUEEN BARRIER ON TERMITE TREATED (OR OPTIONAL BORA CARE) MECHANICALLY COMPACTED FILL @ 95%.
13'-1"
16'-0"
2'-9"
RUN ELECTRIC IN CONDUIT FOR KITCHEN ISLAND
9'-8"
SAWCUT SLAB PER DETAIL 5/S-1
3'-5"
5'-2"
2'-8"
PROVIDE 1/4" WATER LINE @ REF. SPACE FOR ICE MAKER
TILE SHWR. REC. 3 1/2"
OPT. LT.
WASH.
45'-0"
70'-0"
59'-10"
8'-10"
8"
6'-0"
5'-10"
1'-1"
2'-7"
23'-4"
11'-8"
12'-2"
29'-6"
A/C COMPRESSOR SHALL BE INSTALLED AT OR ABOVE FLOOD ELEV.
F6A
WH
RAISED SLAB
3'-8"
ELEV @ 0'-(-4")
2" SLOPE
4'-0"
F6
LANDING AT EGRESS DOOR SHALL BE NO MORE THAN 1-1/2" BELOW TOP OF THRESHOLD (SINCE DOOR SWINGS OUT OVER LANDING) PER R311.3.1
F5
5'-9"
2'-9"
2'-7"
1'-11"
PAVERS BY OTHERS
7 1/2"
4'-7"
6'-0"
14'-0"
F3 W/ CURB
24'-4"
23'-8"
1'-4"
LOWEST POINT OF GARAGE FLOOR SHALL BE CONSTRUCTED AT OR ABOVE FLOOD ELEVATION
8'-0" X 7'-0" O.H. GARAGE DR.
16'-0" X 7'-0" O.H. GARAGE DR.
C
6" X12" RECESS PER DETAIL THIS SHEET
5'-0"
10"
#5 BAR IN GROUTED CELL, LAP 25" WITH #5 DOWEL OUT OF SLAB, WITH 7" HOOK INTO TOP OF BOND BEAM
2'-0"
8'-0"
16'-0"
10'-0"
20'-0"
5'-10"
13'-0"

8F8-1B SET AT GARAGE DOOR HEAD HEIGHT, ADD COURSING AS REQUIRED TO 8X8 BOND BEAM W/ 1 #5 TOP @ 9'-4". ADD #5 VERT @ 48" O.C. GROUT ALL SOLID.

FOUNDATION PLAN: SCALE: 1/4"=1'-0"

REVIEWED FOR CODE COMPLIANCE CAPE CORAL BUILDING DIVISION.
BY Dgl DATE 8/12/14
ALL CONSTRUCTION SHALL BE IN COMPLIANCE WITH THE FLORIDA BUILDING CODE. ALL STATE AND LOCAL CODES. THE GRANTING OF A PERMIT DOES NOT RELIEVE THE CONTRACTOR OF RESPONSIBILITY TO COMPLY WITH ALL CODES AND ORDINANCES.

4" CONC. SLAB
RECESS
GRADE
12"
6"
10"
2 #5 BARS CONT.
1'-0"

GARAGE DOOR RECESS

SCALE: 1/2" = 1'-0"

#5 DOWEL WITH 7" HOOK, EMBED 5" MIN.
25"
FIN. GRADE
20"
1'-0" MIN.
2 #5 CONT. W/ 3" CLEAR COVER.
12"

'F3' FOOTING

CURB IS OPTIONAL AND NOT INCLUDED IN FOOTING DIMENSIONS
#5 DOWEL WITH 7" HOOK, EMBED 5" MIN. BELOW GARAGE FLOOR
25"
7, 5/8"
VARIES WITH SLOPE OF FLOOR
FIN. GRADE
20"
1'-0" MIN.
2 #5 CONT. W/ 3" CLEAR COVER.
12"

'F3' WITH CURB AT GARAGE

1'-0"
2 #5 CONT. W/ 3" CLEAR COVER.
16"

"F5" FOOTING

8"
2 #5
3" CLEAR COVER
16"

'F6' STEP DOWN

8"
1 #5
3" CLEAR COVER
8"

'F6A' STEP DOWN

SAND
PAVERS
GRADE
3"
8"
8"x8" CONC. RIBBON W/ 1 #5 ROD CONT.
8"

'P' PAVERS DETAIL ENTRY/LANAI

WALL FOOTING SCHEDULE

USED	TYPE	LENGTH	WIDTH	DEPTH	BOTTOM REINFORCING	SHAPE
	F1	CONT.	1'-4"	0'-8"	2-#5	
	F2	CONT.	1'-8"	0'-10"	2-#5	
☒	F3	CONT.	1'-0"	1'-8"	2-#5	
	F4	CONT.	1'-4"	1'-8"	2-#5	
	F5	CONT.	1'-4"	1'-0"	2-#5	
☒	F6	CONT.	1'-4"	1'-0"	2-#5	
☒	F6A	CONT.	8"	8"	1-#5	
	TE	CONT.	0'-8"	0'-8"	1-#5	

ADD CURB TO GARAGE, SEE DETAIL

FOUNDATION PLAN

SCALE: 1/4" = 1'-0"

PLAN NOTES:
1) TOP OF GROUND FLOOR SLAB DATUM ELEVATION 0'-0".
2) 'F#' DENOTES CONTINUOUS WALL FOOTING TYPE PER SCHEDULE THIS SHEET.
3) # DENOTES PAD FOOTING AT CONCENTRATED LOADS PER SCHEDULE THIS SHEET.
4) PROVIDE #5 VERTICAL REINFORCING AT DOT LOCATIONS SHOWN ON PLAN FROM FOOTING TO BOND BEAM.
5) ALL DIMENSIONS ARE TO OUTSIDE FACE OF MASONRY WALLS. SOME SLAB EDGES MAY EXTEND BEYOND FACE OF WALL.
6) FOR DIMENSIONS OF ROUGH OPENINGS IN MASONRY WALLS, COORDINATE WITH WINDOW/DOOR SUPPLIER.
7) PROVIDE PRESSURE TREATED BUCKS AT WINDOWS / DOORS PER DETAIL 7/S-1.

DESIGN IN ACCORDANCE WITH THE FLORIDA BUILDING CODE 2010

D·R·HORTON America's Builder

Gulf Coast Drafting
& Design
Phone (239) 540-1822
Fax (239) 540-7759

This signature and seal is for work performed by the Structural Engineer of Record (SER) related to Structural Engineering only. No work was performed by the SER in other disciplines such as architectural, mechanical, plumbing, electrical, fire, life safety, accessibility, energy, site work, civil, or geotechnical.

DEREK BERGENER P.E.
JUL 23 2014
FL PE #58552

STRUCTURAL ENGINEERING
STRUCTURAL SYSTEMS OF NORTH FLORIDA
1634 S.E. 47th ST SUITE #3
CAPE CORAL, FL 33904
(239) 549-4554
CA# 8829

LOT: 15 BLOCK: 7007
SUBDIV: CELEBRATION CAPE
ADDRESS: 211 DESTINY CIRCLE
G.C.D. JOB #: 7977

MODEL: UNIT 1983
RESIDENCE FOR: SPEC

DATE: 7-22-14
DRAWN BY: GCH
CHECKED BY: JWC
REVISED:
PLAN: FOUNDATION
SCALE: 1/4" =1'-0"
SHEET# A-2

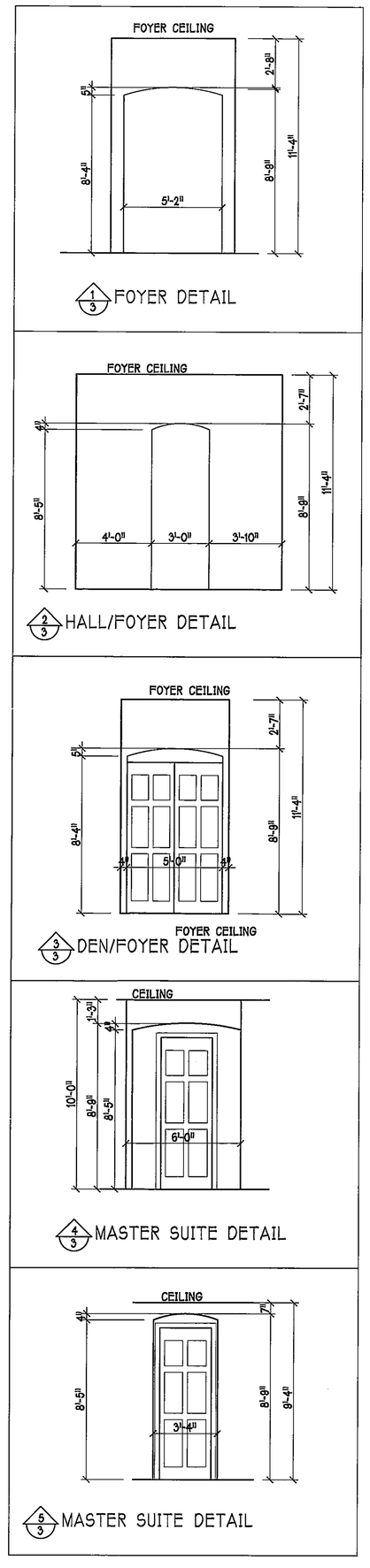

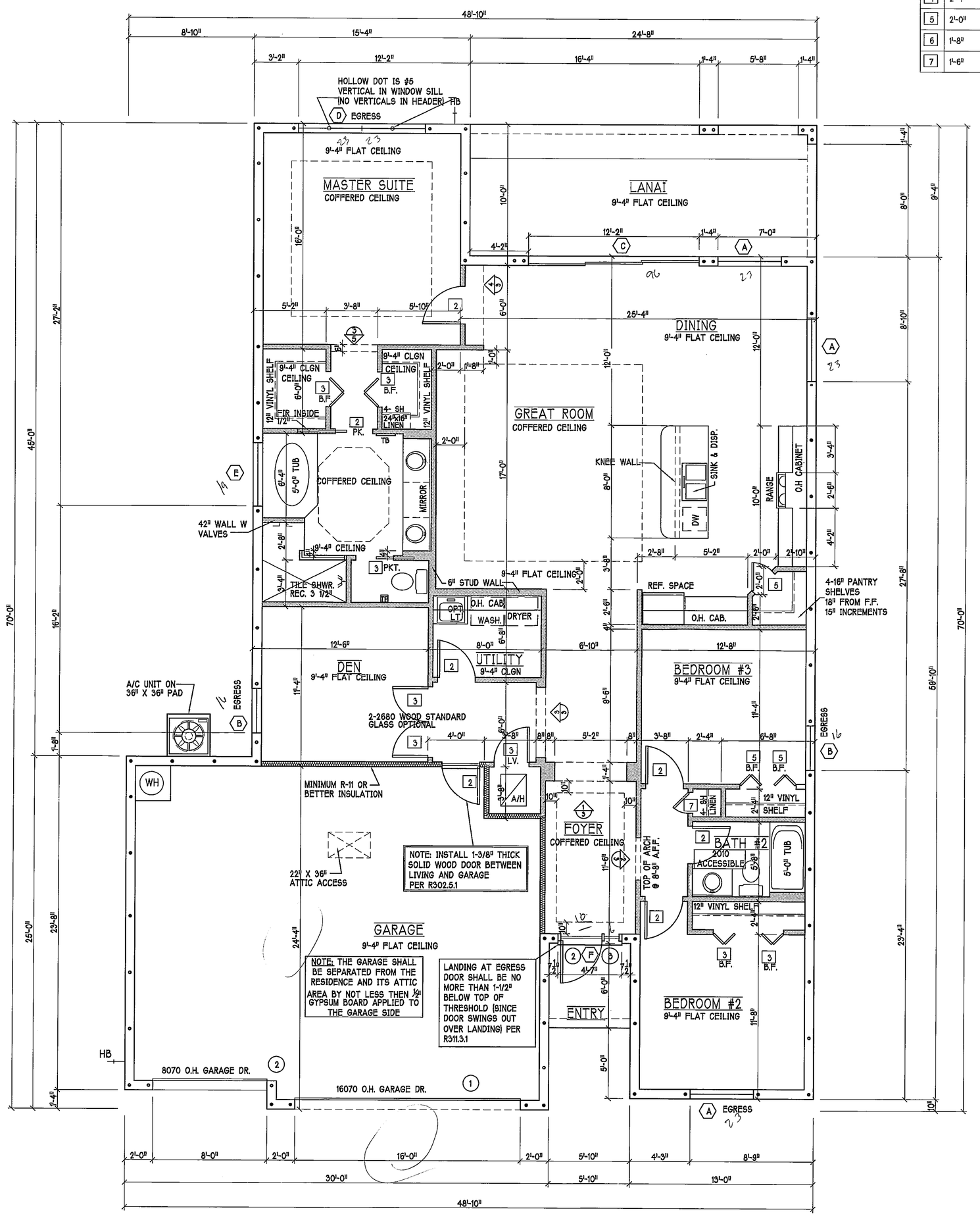

1st FLOOR PLAN: SCALE: 1/4" = 1'-0"

INTERIOR DOOR SCHEDULE

MARK	DOOR WIDTH	NOTES
1	3'-0"	PK. = POCKET DOOR
2	2'-8"	B.F. = BI-FOLD DOOR
3	2'-6"	B.P. = BI-PASS DOOR
4	2'-4"	L.V. = LOUVERED DOOR
5	2'-0"	
6	1'-8"	
7	1'-6"	

WIND PRESSURES PER ASCE7-10, 160 MPH, EXPOSURE B, AND CONVERTED TO ALLOWABLE STRESS DESIGN PRESSURES USING 0.6W LOAD FACTOR. Vasd=124 MPH

D R HORTON

MARK	SIZE CODE	PRODUCT DESCRIPTION	DOOR WIDTH	DOOR HEIGHT	ZONE	WIND PRESSURE	WIND-BORNE DEBRIS PROTECTION	QTY
1	OVERHEAD	GARAGE DOOR	192	84	4&5	+23.3/-26.0		1
2	3080 ENTRY DR.	DISTINCTION	36	96	4	+27.7/-30.0		1
					5	+27.7/-37.0		
3	SIDE LITE		12	96	4	+27.7/-30.0		1
					5	+27.7/-37.0		
4	OVERHEAD	GARAGE DOOR	96	84	4&5	+23.3/-26.0		

GARAGE DOOR ASSUMES 2' IN ZONE 5.

WIND PRESSURES PER ASCE7-10, 160 MPH, EXPOSURE B, AND CONVERTED TO ALLOWABLE STRESS DESIGN PRESSURES USING 0.6W LOAD FACTOR. Vasd=124 MPH

D R HORTON

MARK	SIZE CODE	PRODUCT DESCRIPTION	ZONE	WIND PRESSURE	WIND-BORNE DEBRIS PROTECTION	QTY
A	35 SH		4	+27.7/-30.0	SHUTTERS	3
			5	+27.7/-37.0		
B	25 SH		4	+27.7/-30.0	SHUTTERS	2
			5	+27.7/-37.0		
C	3-4080 SL. GL. DR.	SL. GL. DOOR	4	+24.4/-26.7	SHUTTERS	1
			5	+24.4/-30.6		
D	2-35 SH		4	+27.7/-30.0	SHUTTERS	1
			5	+27.7/-37.0		
E	34 SH		4	+27.7/-30.0	SHUTTERS	1
			5	+27.7/-37.0		
F	55" X 24" FIXED GL.	ABV. ENTRY DR.	4	+27.7/-30.0	SHUTTERS	1
			5	+27.7/-37.0		
						9

OPT IMPACT GLASS MAY BE INSTALLED IN LIEU OF SHUTTERS VERIFY W/ CONTRACT

PLAN NOTES:

1.) KITCHEN KNEE WALL 42 1/2" TO TOP USING 2x4 TOP PLATE.
2.) MEDICINE CABINETS OPENING 14x18 TOP OF OPENING @ 72" / 5" OFF WALL.
3.) JOB MUST BE BROOM SWEPT EVERYDAY.
4.) VERIFY ROUGH OPENING DIMENSIONS FOR ALL WINDOWS AND DOORS.
5.) PROVIDE DEAD WOOD IN ATTIC FOR OVERHEAD GARAGE DOOR HARDWARE.
6.) INSTALL SMOOTH WALLS IN KITCHEN AND ALL BATHROOM AREAS.
7.) WHERE DRYWALL CEILING IS APPLIED TO TRUSSES AT 24" O.C. USE 5/8" DRYWALL OR 1/2" SAG RESISTANT PER SEC. 702.3.5.

CABINET BACKING

KITCHEN	UPPER TOP @ 54", 84" & 96" MICROWAVE @ 102"	BASE TOP @35"
MASTER BATH	UPPER	BASE- TOP @35"
GUEST BATH	UPPER	BASE- TOP @31"
LAUNDRY RM.	UPPER TOP @84"	BASE

BATHROOM NOTES

ALL TUB DECKS @ 21" A.F.F.

ALL BLOCKING TO BE PT IN SHOWERS

DOOR HEADERS

6'-8" BIFOLD	HEADER HEIGHT	82" A.F.F.
6'-8" SWING	HEADER HEIGHT	82 1/2" A.F.F.
8'-0" SWING	HEADER HEIGHT	88 1/2" A.F.F.

VINYL SHELF NOTES:

1) ALL CLOSET SHELVES TO BE 12"
2) ALL PANTRY & LINEN TO BE (4) 16" SHELVES 18" O.F.F. WITH 15" INCREMENT.

SQUARE FOOTAGE

FLOOR LIVING AREA	1,983
GARAGE AREA	714
ENTRY AREA	35
LANAI AREA	230
TOTAL AREA	2,962

REVIEWED FOR CODE COMPLIANCE CAPE CORAL BUILDING DIVISION DATE 7/29/14 BY

ALL CONSTRUCTION SHALL BE IN COMPLIANCE WITH THE FLORIDA BUILDING CODE AND ALL STATE AND LOCAL CODES. THE GRANTING OF A PERMIT DOES NOT PERMIT A VIOLATION OF ANY PROVISION OF THE FLORIDA BUILDING CODE OR OTHER ORDINANCES OF THE CITY OF CAPE CORAL.

PROVIDE SAFETY GLAZING WITHIN 24" FROM EXIT DOOR. (PER FLORIDA BUILDING CODE-R308.3.1)

NOTE: PROVIDE SAFETY GLAZING AT BATH/SHRW. SHALL COMPLY WITH R 308.3.1

**** NOTE: ****
STUB OUT FOR GAS @ OUTDOOR KITCHEN, RANGE, WATER HEATER, AND DRYER. VERIFY WITH CONTRACT AND SUBDIV. SPECS. A SEPARATE PERMIT IS REQUIRED FOR GAS PIPING.

BATHROOM NOTES

TB TOWEL BAR	ALL TUB DECKS @ 21" A.F.F.
TP TOILET PAPER	ALL BLOCKING TO BE PT IN SHOWERS

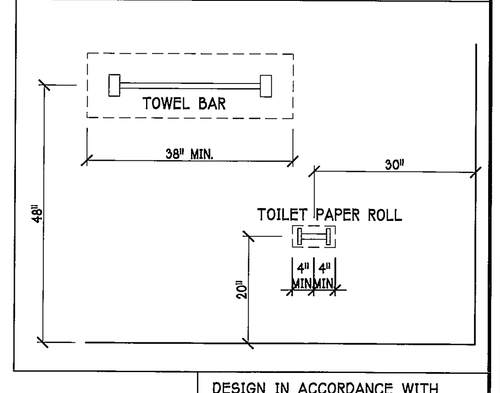

DESIGN IN ACCORDANCE WITH THE FLORIDA BUILDING CODE 2010

D·R·HORTON America's Builder

Gulf Coast Drafting & Design
Phone (239) 540-1822
Fax (239) 540-7759

This Structural Plan is to be used in conjunction with the Structural Details (SDR) related to Structural Engineering only. No work was performed by the SSOR in other disciplines such as architectural, mechanical, plumbing, electrical, fire, life safety, zoning, energy, wind, soil, civil, or geotechnical.

STRUCTURAL SOLUTIONS ENGINEERING
1634 SE 47th ST. SUITE #3
CAPE CORAL, FL 33904
(239) 549-4554
CA# 8829
DUANE WEGENER P.E.
JUL 23 2014
FL PE #58552

LOT: 15 BLOCK: 7007
SUBDIV: CELEBRATION CAPE
ADDRESS: 211 DESTINY CIRCLE
G.C.D. JOB #: 7977

MODEL: UNIT 1983
RESIDENCE FOR: SPEC

DATE: 7-22-14
DRAWN BY: GCH
CHECKED BY: JWC
REVISED:
PLAN: FLOOR PLAN
SCALE: 1/4" =1'-0"
SHEET# A-3

ATTIC VENTILATION

verify venting requirment with energy calculations		WITHOUT OFF RIDGE VENTS	WITH OFF RIDGE VENTS		
ATTIC AREA (FBC R806)		VENTILATION REQUIRED (ATTIC AREA 1/150)	VENTILATION REQUIRED (ATTIC AREA 1/300 INSTALL PER FBC R806.2 MINIMUM AREA REQUIREMENTS)		
mark	square footage	soffit vents	total ventilation	off ridge vents	soffit vents
1	2962 SQ. FT.	19.8 SQ. FT.	9.9 SQ. FT.	4.95 SQ. FT.	4.95 SQ. FT.
		ATTIC VENTILATION CALCULATION: attic sq. ft. / 150 = vented sq. ft.	ATTIC VENTILATION CALCULATION: attic sq. ft. / 300 = vented sq. ft		

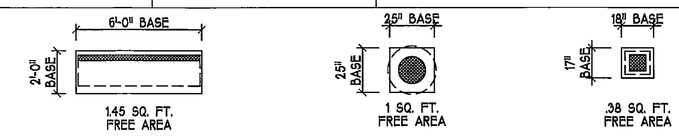

OFF RIDGE EXHAUST VENT SIZES (AREA NET FREE SQUARE FEET)

SCALE: 1/4"=1'-0"

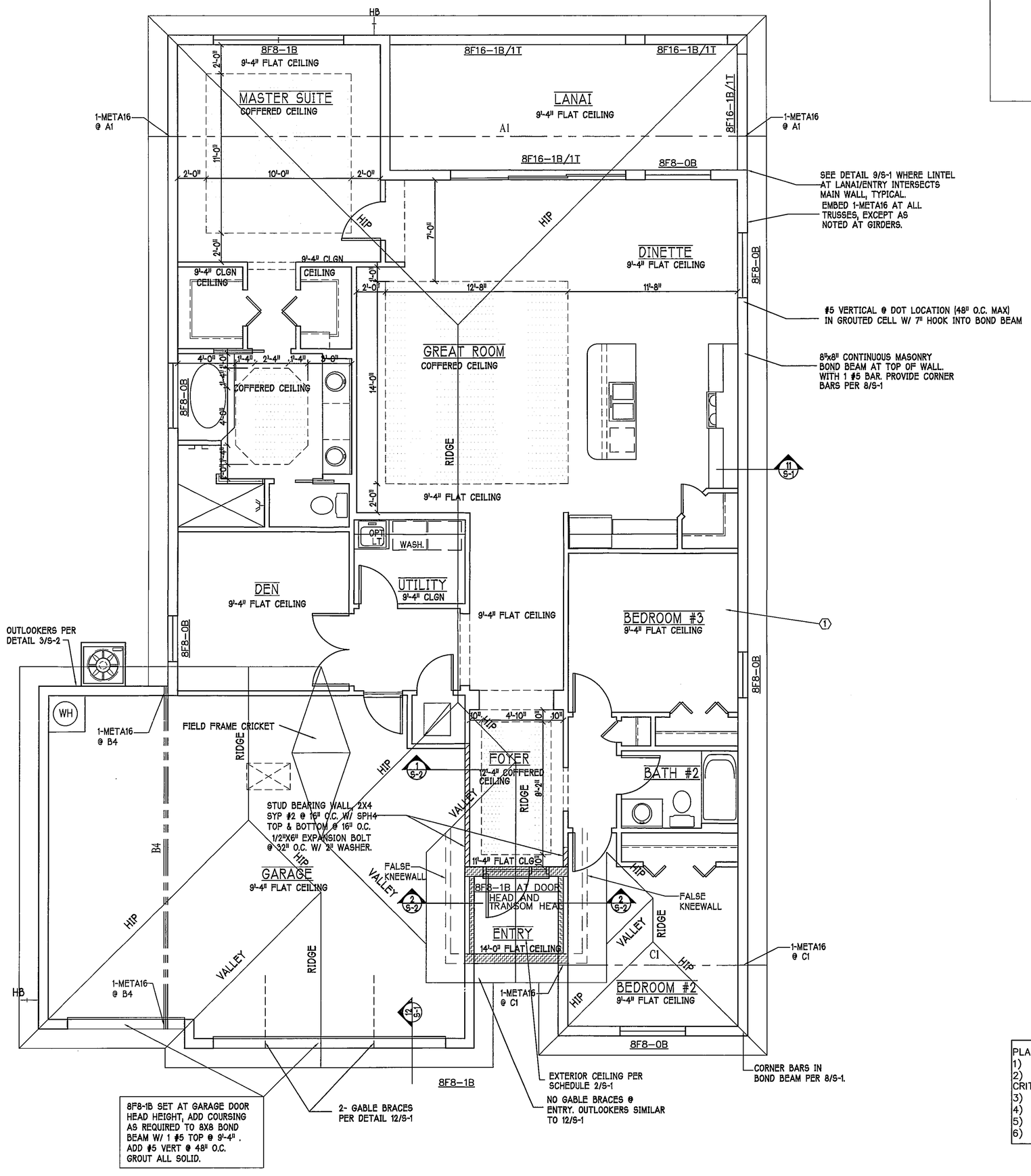

ROOF PLAN "B&D". SCALE: 1/4" = 1'-0"

BEARING HEIGHT

= INTERIOR BEARING @ 9'-4" A.F.F.

= BEARING @ 9'-4" A.F.F.

= BEARING @ 14'-0" A.F.F.

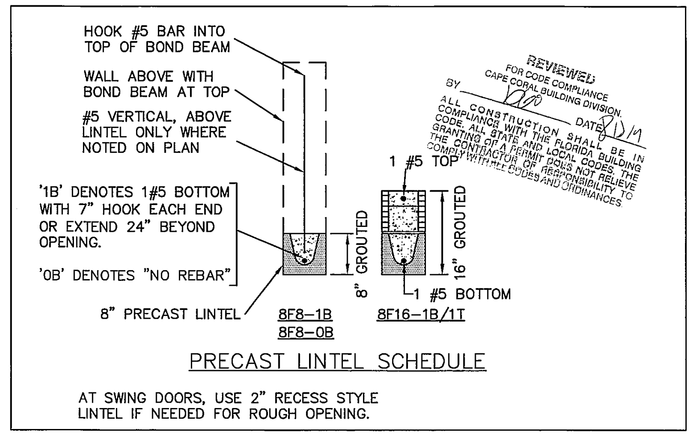

PRECAST LINTEL SCHEDULE

AT SWING DOORS, USE 2" RECESS STYLE LINTEL IF NEEDED FOR ROUGH OPENING.

PLAN NOTES:
1) ROOF TRUSS BEARING ELEVATION VARIES, SEE LEGEND.
2) ROOF FRAMING SHALL BE WOOD TRUSSES DESIGNED BY A DELEGATED TRUSS ENGINEER PER DESIGN CRITERIA ON SHEET S-1.
3) PROVIDE STRAPPING AT TRUSSES PER NOTES ON THIS SHEET.
4) FOR NAILING OF ROOF DECK, SEE 1 AND 2 ON S-1.
5) 8F8-1B etc., DENOTES PRECAST LINTEL ABOVE DOOR/WINDOW OPENING PER SCHEDULE THIS SHEET.
6) AT TRUSS BEARING, PROVIDE 8x8 MASONRY BOND BEAM W/ 1 #5 CONTINUOUS, SEE DETAIL 2/A-6.

TRUSS BEARING CONDITIONS AND STRAPPING IS BASED ON TRUSS LAYOUT PREPARED BY SCOSTA CORP. JOB #: 44223B3, DATED: 6/26/2014, REVISED: NONE

TRUSS STRAPPING TO MASONRY

INSTALL META16 AT ALL TRUSSES TO 1450 lb UPLIFT. FOR HIGHER UPLIFTS, SEE NOTES ON PLAN.

MAX TRUSS UPLIFT @ 24" OC (LBS)	CONNECTOR	FASTENER
1450	(1)META16 TO 40	9–10dx1½", EMBED 4"
1810	(1)HETA16 TO 40	10–10dx1½", EMBED 4"
2235	(1)HHETA16 TO 40	12–10dx1½", EMBED 4"
1985 (1 PLY)	(2)META12 TO 40	12–10dx1½", EMBED 4"
1900 (2 PLY)	(2)META12 TO 40	14–16d, EMBED 4"
2500 (2 PLY)	(2)HETA12 TO 40	14–16d", EMBED 4"
2500 (2 PLY)	(2)HHETA12 TO 22	14–16d", EMBED 4"

NOTES:
1) PROVIDE A STRAP FROM THE ABOVE LIST AT EACH ROOF TRUSS BEARING POINT, BASED ON THE TRUSS UPLIFT VALUES IN THE SIGNED AND SEALED TRUSS DESIGN PACKAGE AND SUITABLE FOR THE GEOMETRY. EMBED STRAP ON ℄ OF WALL.
2) CONNECTORS ARE SIMPSON STRONG TIE. ALL CONNECTORS SHALL BE INSTALLED IN STRICT ACCORDANCE WITH SIMPSON PRINTED INSTRUCTIONS. SUBSTITUTIONS MUST BE APPROVED IN WRITING BY THE ENGINEER OF RECORD.
3) WHERE EMBEDDED STRAPS ARE MISSING, OR MIS–LOCATED, INSTALL RETROFIT STRAP PER 10/S–1.

REV 2

DESIGN IN ACCORDANCE WITH THE FLORIDA BUILDING CODE 2010

D·R·HORTON America's Builder

Gulf Coast Drafting & Design
Phone (239) 540-1822
Fax (239) 540-7759

This signature and seal is for work performed by the Structural Engineer of Record (SER) pertinent to Structural Engineering only. The SER assumes no responsibility for work done by others including, but not limited to, architectural, mechanical, electrical, plumbing, fire, life safety, accessibility, energy, site work, civil, or geotechnical.

STRUCTURAL ENGINEERING
STRUCTURAL SYSTEMS OF NORTH FLORIDA
1524 S.E. 47th ST SUITE #3
CAPE CORAL, FLORIDA 33904
(239) 549-4554
CA# 8829

DEREK PEDERSENER P.E.
JUL 23 '2014
FL PE #50532

LOT: 15 BLOCK: 7007
SUBDIV: CELEBRATION CAPE
ADDRESS: 211 DESTINY CIRCLE
G.C.D. JOB #: 7977

MODEL: UNIT 1983
RESIDENCE FOR: SPEC

DATE: 7-22-14
DRAWN BY: GCH
CHECKED BY: JWC
REVISED:
PLAN: ROOF PLAN
SCALE: 1/4" =1'-0"
SHEET# A-4 B&D

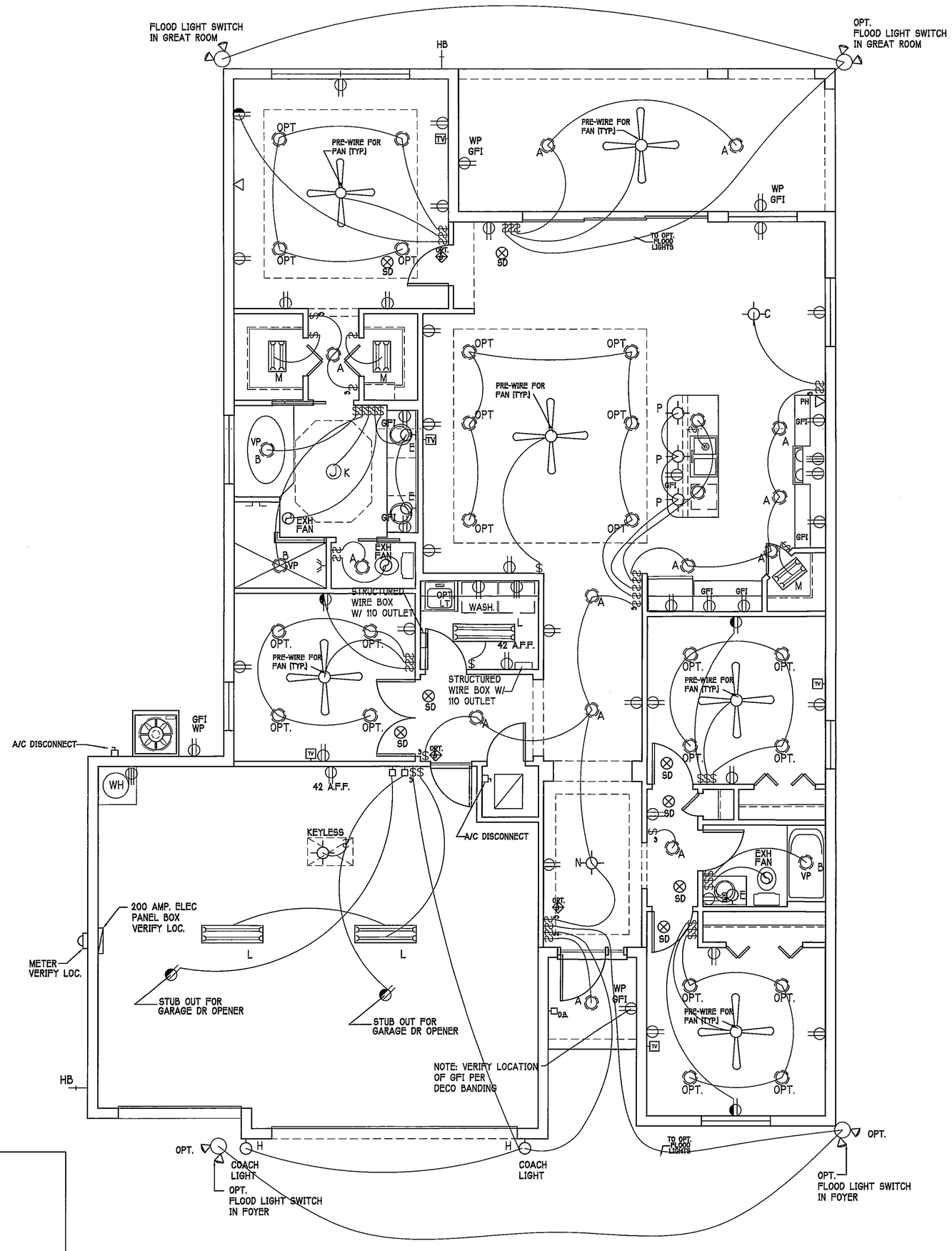

ELECTRICAL PLAN: SCALE: 1/4" = 1'-0"

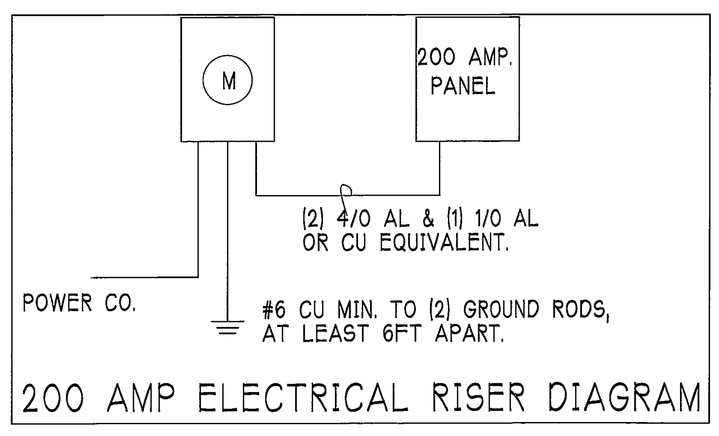

200 AMP ELECTRICAL RISER DIAGRAM

ELECTRICAL LEGEND

	ELECTRICAL METER
	ELECTRICAL PANEL
	120 V JUNCTION BOX
	SINGLE RECEPTACLE OUTLET
	220 V RECEPTACLE OUTLET
	4-PLEX RECEPTACLE OUTLET
	DUPLEX RECEPTACLE OUTLET
	1/2 SWITCHED DUPLEX OUTLET
	DUPLEX RECETACLE @ ELEV. A.F.F.
T	TIMER SWITCH
GFI	GFI SWITCH
D	DIMMER SWITCH
3	3 WAY SWITCH
	SINGLE POLE SWITCH
SD	AC/DC SMOKE DETECTOR TO BE INTERCONNECTED ANY RESIDENT HAVING A FOSSIL-BURNING HEATER OR APPLIANCE, A FIREPLACE, OR AN ATTACHED GARAGE SHALL HAVE AN OPERATIONAL CARBON MONOXIDE ALARM INSTALLED WITHIN 10 FEET OF EACH ROOM USED FOR SLEEPING PERPOSES. PER RULE 9B-3.04.72
	TELEPHONE OUTLET
TV	TELEVISION RECEPTION OUTLET
	SURFACE MOUNTED CEILING LIGHT
	RECESSED LIGHT
	WALL MTD. BRACKET LIGHT
	EXHAUST FAN
	A/C DISCONNECT
	PUSH BUTTON
	DB= DOOR BELL

Electrical Notes:

Arc-Fault circuit-Interrupters & Tamper-Resistant Receptacles shall be installed in dwelling units per NEC 210.12 & 406.11

All electrical equipment to be set at or above base flood elevation.

All outlets in wet areas and all exterior outlets to be GFI's

Install Phone & T.V per contract .

INSTALL ALL ELECTRICAL PER NEC 2008

OPTIONAL ELECTRICAL PLAN 1983

200 Amp Service

TAG	QUANTITY	PRODUCT	PRODUCT #
A	(37)	Recessed Cans	
B	(3)	Vapors	
C	(1)	Pendant/Nook	P4070-09
D	(X)	10" Mushrooms	P3410-30
E	(3)	24" Avalon 3 LT	P3268-09
F	(X)	36" Avalon 4 LT	P3269-09
G	(X)	NOT USED	NOT USED
H	(2)	Coach Lights	P5815-30
J	(X)	Coach Lights	P5683-30
K	(2)	J BOX	
L	(2)	4' Fluorescent	P7186-30
M	(3)	2' Fluorescent	P7183-30
N	(1)	5lt Chandelier	P4068-09
O	(1)	3 LT Avalon	P3773-09
P	(3)	Pendant Light	P-5068-09

DESIGN IN ACCORDANCE WITH THE FLORIDA BUILDING CODE 2010

D·R·HORTON America's Builder

Gulf Coast Drafting & Design
Phone (239) 540-1822
Fax (239) 540-7759

LOT: 15 BLOCK : 7007
SUBDIV: CELEBRATION CAPE
ADDRESS: 211 DESTINY CIRCLE
G.C.D. JOB #: 7977

MODEL: UNIT 1983
RESIDENCE FOR: SPEC

DATE: 7-22-14
DRAWN BY: GCH
CHECKED BY: JWC
REVISED:
PLAN: ELECTRICAL
SCALE: 1/4" =1'-0"
SHEET# A-5

RESIDENTIAL SPECIFICATIONS

1

GENERAL NOTES

1. THE CONTRACTOR SHALL VERIFY ALL CONDITIONS AND DIMENSIONS AT THE JOB SITE PRIOR TO COMMENCING WORK. THE CONTRACTOR SHALL REPORT ALL DISCREPANCIES BETWEEN THE DRAWINGS AND EXISTING CONDITIONS TO THE DESIGNER PRIOR TO COMMENCING WORK.
2. THE CONTRACTOR SHALL SUPPLY, LOCATE AND BUILD INTO THE WORK ALL INSERTS, ANCHORS, ANGLES, PLATES, OPENINGS, SLEEVES, HANGERS, SLAB DEPRESSIONS AND PITCHES AS MAY BE REQUIRED TO ATTACH AND ACCOMMODATE OTHER WORK.
3. ALL DETAILS AND SECTIONS SHOWN ON THE DRAWINGS ARE INTENDED TO BE TYPICAL AND SHALL BE CONSTRUCTED TO APPLY TO ANY SIMILAR SITUATION ELSEWHERE IN THE WORK EXCEPT WHERE A DIFFERENT DETAIL IS SHOWN.
4. SUBSURFACE SOIL CONDITION INFORMATION IS NOT AVAILABLE FOUNDATIONS ARE DESIGNED FOR A SOIL BEARING CAPACITY OF 2,000 PSF. THE CONTRACTOR SHALL REPORT ANY DIFFERING CONDITIONS TO THE DESIGNER PRIOR TO COMMENCING WORK.
5. STRUCTURAL DRAWINGS SHALL BE USED IN CONJUNCTION WITH JOB SPECIFICATION AND HOUSE PLANS, MECHANICAL, ELECTRICAL, PLUMBING, AND SITE DRAWINGS, CONSULT THESE DRAWINGS FOR SLEEVES, DEPRESSIONS AND OTHER DETAILS NOT SHOWN ON STRUCTURAL DRAWINGS.
6. ALL SPECIFIED FASTENERS MAY ONLY BE SUBSTITUTED IF APPROVED BY THE ENGINEER IN WRITING, THE INSTALLATION OF THE FASTENERS SHALL BE IN ACCORDANCE WITH THE MANUFACTURER'S SPECIFICATIONS. SIMPSON FASTENERS SPECIFIED MAY BE SUBSTITUTED WITH THE SAME QUANTITY AND EQUIVALENT STRENGTH PRODUCT.
7. TREATED WOOD REQUIREMENTS:- ALL WOOD EXPOSED TO WEATHER SHALL BE PROTECTED, PRESSURE TREATED, OR NATURALLY RESISTANT TO DECAY. ALL WOOD TOUCHING MASONRY OR CONCRETE SHALL BE ISOLATED, OR PRESSURE TREATED.
8. THE STRUCTURE IS DESIGNED TO BE SELF SUPPORTING AND STABLE AFTER THE BUILDING IS COMPLETE. IT IS THE CONTRACTOR'S SOLE RESPONSIBILITY TO DETERMINE ERECTION PROCEDURES AND SEQUENCES TO ENSURE SAFETY OF THE BUILDING AND ITS COMPONENTS DURING ERECTION. THIS INCLUDES THE NECESSARY SHORING, SHEETING, TEMPORARY BRACING, GUYS, OR TIE DOWNS.
9. CEILING DRYWALL INSTALLED WITHIN THE HOUSE TO TRUSSES SPACED 24" O.C. SHALL BE 5/8" DRYWALL OR 1/2" SAG RESISTANT PER SEC. 702.3.5
10. LANAI CEILINGS & COVERED ENTRY CEILINGS 1X4 STRIPPING @ 16" O.C. FASTENED WITH 2-8d NAILS TO EACH TRUSS. 5/8" EXTERIOR GYPBOARD CEILING FASTENED WITH 8d NAILS OR 1-5/8" DRYWALL SCREWS @ 6" oc EDGE AND FIELD.

2

DOOR AND WINDOW ANCHORAGE

ANCHORAGE REQUIREMENTS:- ALL PASS AND SLIDING GLASS DOORS AND ALL WINDOW ASSEMBLIES SHALL BE ANCHORED TO THE MAIN WIND FORCE RESISTING SYSTEM IN A MANNER SPECIFIED BY THE PUBLISHED MANUFACTURERS LITERATURE. THERE SHALL BE NO SUBSTITUTION OF ALTERNATE FASTENINGS UNLESS PROVIDED BY THE MANUFACTURER AND APPROVED BY THE BUILDING DESIGN ENGINEER.

MASONRY OPENING
WHERE WINDOW FRAME IS DESIGN TO FASTEN WITH SCREWS THROUGH THE FRAME AND INTO THE MASONRY, THE BUCK MATERIEL IS SIMPLY A SPACER. THE BUCK MAY BE FASTENED WITH T NAILS OR ANY SUITABLE FASTENER TO TACK IT INTO POSITION PRIOR TO WINDOW INSTALLATION. FASTEN WINDOW FRAME PER MFR INSTRUCTIONS. A WINDOW FASTENER SHALL PENETRATE MASONRY BY 2 1/4" MIN.

WHERE WINDOW FRAME IS DESIGNED TO FASTEN ONLY TO THE WOOD BUCK (IE, FLANGED FRAME WITH WOOD SCREWS) THE BUCKS SHALL BE 2X WOOD WITH STRUCTURAL FASTENING TO THE MASONRY WITH 1/4X 3 3/4 MASONRY SCREWS @ 24" OC AND 6" FROM EACH END.

WOOD FRAMED OPENING:- ALL DOORS AND WINDOWS SHALL BE INSTALLED ACCORDING TO THE PUBLISHED MANUFACTURES LITERATURE OF THE ASSEMBLY BEING INSTALLED TO THE ROUGH SUBSTRATE OPENING. SHIMS SHALL BE MADE OF MATERIALS CAPABLE OF RESISTING THE APPLIED LOADS AND SHALL BE LOCATED NEAR EACH FRAME FASTENERTO MINIMIZE DISTORTION OF THE FRAME AS THE FASTENERS ARE TIGHTENED.

3

GENERAL ROOF ASSEMBLY

ROOF SHEATHING

SHALL BE APA RATED SHEATHING, EXPOSURE 1, SPAN RATING 24/16 OR BETTER. INSTALL PANELS WITH LONG DIMENSION PLACED PERPENDICULAR TO TRUSSES. A 1/8" SPACE BETWEEN ADJACENT SHEETS SHALL BE MAINTAINED. INSTALL "H" CLIPS AT UNSUPPORTED PANEL EDGES. THE ROOF SHEATHING SHALL BE NAILED WITH 8d RING SHANK NAILS @6" O.C. EDGE AND FIELD. ENSURE THAT ALL NAILS PENETRATE THE TOP CHORD OF THE TRUSS WITHOUT SPLITTING. RING SHANK NAILS PER R803.2.3.1 - 0.113" NOMINAL SHANK DIAMETER, RING DIA. OF 0.012" OVER SHANK DIAMETER, 16 TO 20 RINGS PER INCH, 0.280" DIAMETER FULL ROUND HEAD, 2" NAIL LENGTH.

FLASHING
FLASHING SHALL BE ALUMINUM, ALUMINUM ZINC COATED STEEL .0179 INCHES THICK, 26 GAGE AZ50 ALUM ZINC, OR GALVANIZED STEEL .0179 INCHES THICK, 26 GAGE ZINC COATED G90, FLASHING SHALL BE INSTALLED IN ACCORDANCE WITH THE ZIP SYSTEM ROOF SHEATHING MANUFACTURERS PUBLISHED REQUIREMENTS. ALL FLASHING AND INSTALLATION SHALL CONFORM TO SECTION R905.2.8 (1 TO 5).

DRIP EDGE
DRIP EDGE SHALL BE PROVIDED AT ALL EAVES AND GABLES OF SHINGLE ROOFS, LAPPED A MINIMUM OF 3" @ JOINTS. THE OUTSIDE EDGE SHALL EXTEND A MINIMUM OF 1/2" BELOW SHEATHING AND THE INSIDE EDGE SHALL EXTEND BACK A MINIMUM OF 2". DRIP EDGE SHALL BE FASTENED AT NO MORE THAN 4" CENTERS. THERE SHALL BE A MINIMUM OF 4" WIDTH OF ROOF CEMENT INSTALLED OVER THE DRIP EDGE FLANGE.

4

WOOD FRAMING:

1. ALL WOOD FRAMING SHALL BE FABRICATED AND INSTALLED PER NATIONAL DESIGN SPECIFICATIONS FOR WOOD CONSTRUCTION.
2. UNLESS NOTED OTHERWISE THE FOLLOWING MINIMUM GRADES SHALL BE USED:
   A. INTERIOR BEARING WALLS SPF #2
   B. RAFTERS, JOISTS, HEADERS AND BEAMS SYP #2. EXTERIOR BEARING WALLS,
3. TREATED WOOD REQUIREMENTS: ALL WOOD EXPOSED TO WEATHER SHALL BE PROTECTED, PRESSURE TREATED, OR NATURALLY RESISTANT TO DECAY. ALL WOOD TOUCHING MASONRY OR CONCRETE SHALL BE ISOLATED, PRESSURE TREATED.
4. CONTRACTOR SHALL PROVIDE ALL FASTENING DEVICES AS SHOWN ON THE DRAWINGS AND AS NECESSARY AND SUITED FOR EACH APPLICATION. FASTENING SUBJECT TO MOISTURE SHALL BE HOT DIP GALVANIZED TO ASTM A-153-80, OR STAINLESS STEEL.
5. ALL METAL CONNECTIONS AND FABRICATIONS SHALL COMPLY WITH AISC SPECIFICATIONS.
6. SOLID BLOCK ALL JOISTS AND RAFTERS AT POINTS OF SUPPORT.
7. PREFABRICATED STRUCTURAL TRUSSES SHALL COMPLY WITH NFPA NATIONAL DESIGN SPECIFICATIONS FOR WOOD CONSTRUCTION, TPI DESIGN SPECIFICATIONS FOR METAL PLATE WOOD TRUSSES AND ATTIC 100.
8. ALL TRUSSES SHALL BE DESIGNED AND CERTIFIED BY THE TRUSS MANUFACTURER'S STATE OF FLORIDA REGISTERED ENGINEER.
9. CONTRACTOR SHALL CORRELATE WITH TRUSS MANUFACTURER TO ENSURE THAT ADEQUATE BEARING IS IS PROVIDED AT END REACTIONS OF ALL GIRDER TRUSSES.
10. TRUSS MANUFACTURER SHALL SUBMIT SHOP DRAWINGS TO THE CONTRACTOR AND DESIGNER FOR REVIEW AND APPROVAL PRIOR TO FABRICATION. CONTRACTOR SHALL BE RESPONSIBLE FOR FIELD VERIFICATION OF DIMENSIONS, MATERIALS AND CONDITIONS.
11. AT VOLUME CEILING CONDITIONS, ALIGN TRUSSES TO PROVIDE A SMOOTH AND UNBROKEN INTERIOR WALL SURFACE FROM FLOOR TO CEILING.
12. BRACE TRUSSES DURING-ERECTION AND AFTER PERMANENT INSTALLATION TO COMPLY WITH TPI BWY-76.
13. MICRO-LAMS (OR EQUAL PARALAMS, LVL'S, ETC.) SHALL BE USED WHERE SPECIFIED ON ENGINEERED PLANS AND INSTALLED IN ACCORDANCE WITH MANUFACTURER'S RECOMMENDATIONS. ANY EDGES OR ENDS EXPOSED TO THE WEATHER SHALL BE PROTECTED BY THE INSTALLATION OF 26 GA., MIN., GALVANIZED STEEL FLASHING.
14. SPLICES IN MULTI-BOARD CONTINUOS BEAMS SHALL BE ALLOWED FOR ONE BOARD ONLY PER SPAN AND ONLY AT THE QUARTER POINT OF THE SPAN, UNLESS SHOWN OTHERWISE.
15. SPACE FRAMING OF ARCHES UNDER TIE BEAM SHALL BE FILL IN FRAME UNLESS NOTED OR CONSTRUCTED OTHERWISE.

5

ASPHALT SHINGLE ROOF SPEC'S

SHINGLES
15# felt shall be installed under asphalt shingles. All asphalt shingles shall have self sealing strips or be interlocking and comply with ASTM D 225 or D3462, and shall be secured to the roof with no less than 6 fasteners per shingle strip, or a minimum of 2 fasteners per shingle tab. And shall in no case be fastened with less fasteners than that required by the manufacture. Installation shall comply with the manufactures requirements for installation in the given Florida wind zone, as determined by ASTM D 3161.

FASTENERS
Fasteners for asphalt shingles shall comply with ASTM F 1667, and shall be made of galvanized steel, stainless steel or aluminum with a minimum shank size of 12 gage (0.105 inches)with a minimum 3/8 inch diameter head and shall be of a length to penetrate the sheathing.

The nail component of plastic cap nails shall meet or exceed the requirements of ASTM A 641, Class I, or equal, and shall be corrosion resistant by coating electro galvanization, mechanical galvanization, hot dipped galvanization or shall be made of stainless steel, non ferrous metal.

6

CLAY AND CONCRETE TILE ROOF SPECS

INSTALL PEEL AND STICK UNDERLAYMENT APPROVED FOR SINGLE LAYER APPLICATION UNDER TILE ROOF.
THE INSTALLATION OF CLAY AND CONCRETE TILE SHALL COMPLY WITH THE PROVISIONS OF R905.3 F.B.C.
MARKING: EACH ROOF TILE SHALL HAVE A PERMANENT MANUFACTURER'S IDENTIFICATION MARK.
APPLICATION SPECIFICATIONS: THE TILE MANUFACTURER'S WRITTEN APPLICATION SPECIFICATIONS SHALL BE AVAILABLE AND SHALL INCLUDE BUT NOT BE LIMITED TO THE FOLLOWING:
1. TILE PLACEMENT AND SPACING,
2. ATTACHMENT SYSTEM NECESSARY TO COMPLY WITH CURRENT WIND CODE,
A. AMOUNT AND PLACEMENT OF MORTAR
B. AMOUNT AND PLACEMENT OF ADHESIVE,
C. TYPE, NUMBER, SIZE, AND LENGTH OF FASTENERS AND CLIPS.
3. UNDERLAYMENT
4. SLOPE REQUIREMENT.

7

FLOOR SHEATHING AT 2ND FLOOR

A.P.A. RATED STURDI-FLOOR, EXPOSURE 1, TONGUE & GROOVE EDGES SPAN RATING 48/24 OR BETTER, GLUE AND NAIL W/ 10d COMMON @ 6" O.C. EDGE AND FIELD.

8

EXTERIOR WALL SHEATHING

SHALL BE 7/16" THICK 'ZIP SYSTEM WALL SHEATHING' MANUFACTURED BY HUBER ENGINEERED WOODS LLC. INSTALL PANELS WITH A 1/8" GAP BETWEEN EDGES AND FASTEN WITH 8d COMMON NAILS @ 6" O.C. EDGE AND FIELD. IF PANELS ARE INSTALLED HORIZONTALLY, BLOCKING SHALL BE INSTALLED BEHIND PANEL JOINTS. ALL SEAMS IN THE SHEATHING SHALL BE SEALED WITH THE ZIP SYSTEM SELF ADHERING SEAM TAPE USING THE ZIP SYSTEM APPLICATOR GUN. THE USUAL TYVEK HOUSE WRAP IS NOT REQUIRED.

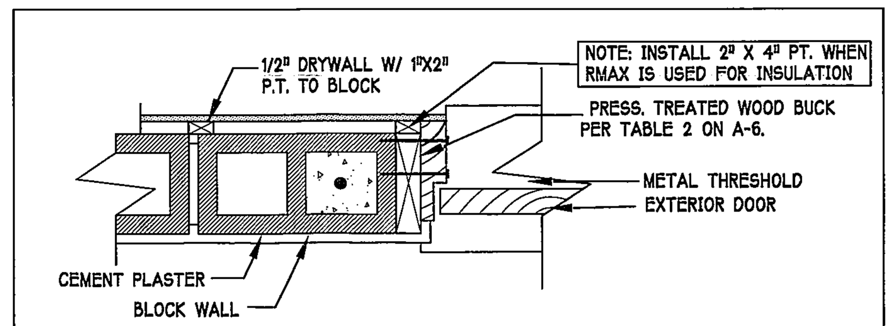

DOOR JAM TO BLOCK DETAIL SCALE 1" = 1'-0"

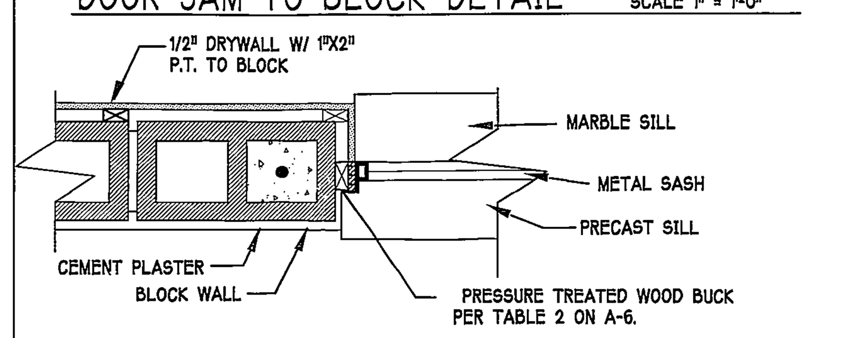

WINDOW JAM TO BLOCK DETAIL SCALE 1" = 1'-0"

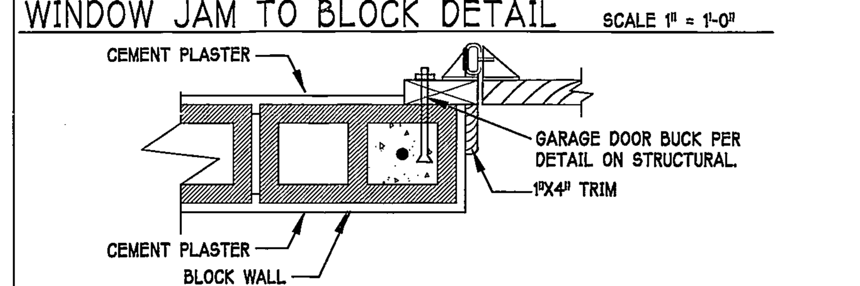

GARAGE DOOR JAM DETAIL SCALE 1 1/2" = 1'-0"

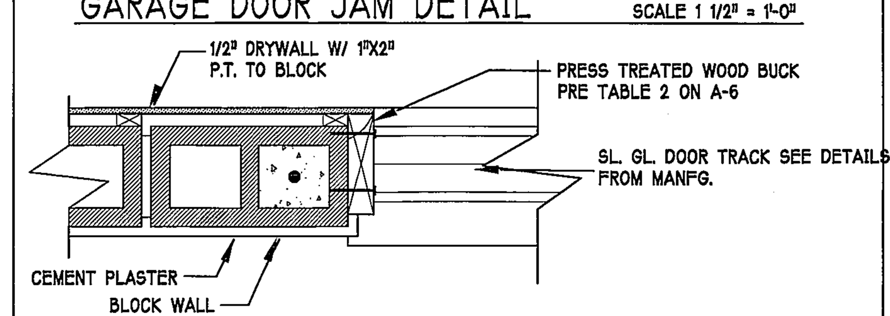

SL. GL. DR. JAM TO BLOCK DETAIL SCALE 1" = 1'-0"

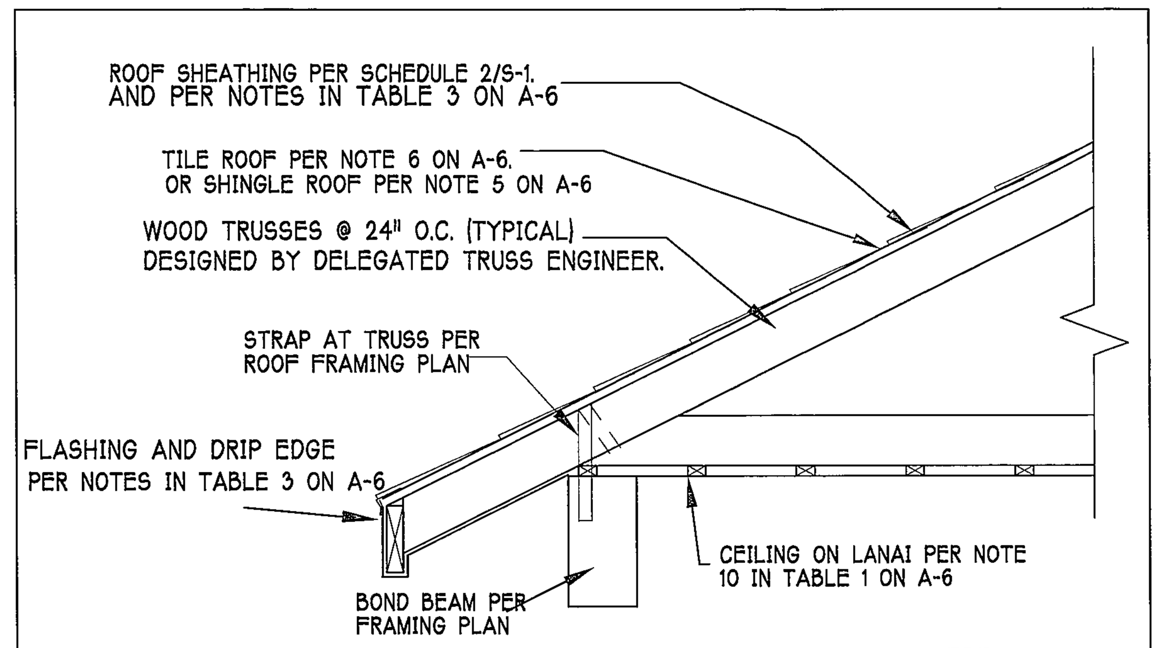

LANAI/ENTRY ROOF ASSEMBLY

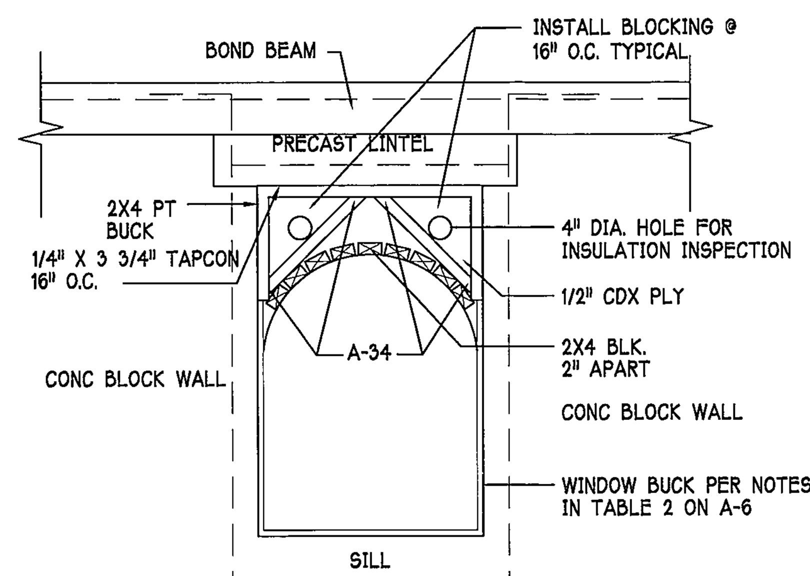

WINDOW OR DOOR ARCH SPACE FRAMING ABOVE NO SCALE

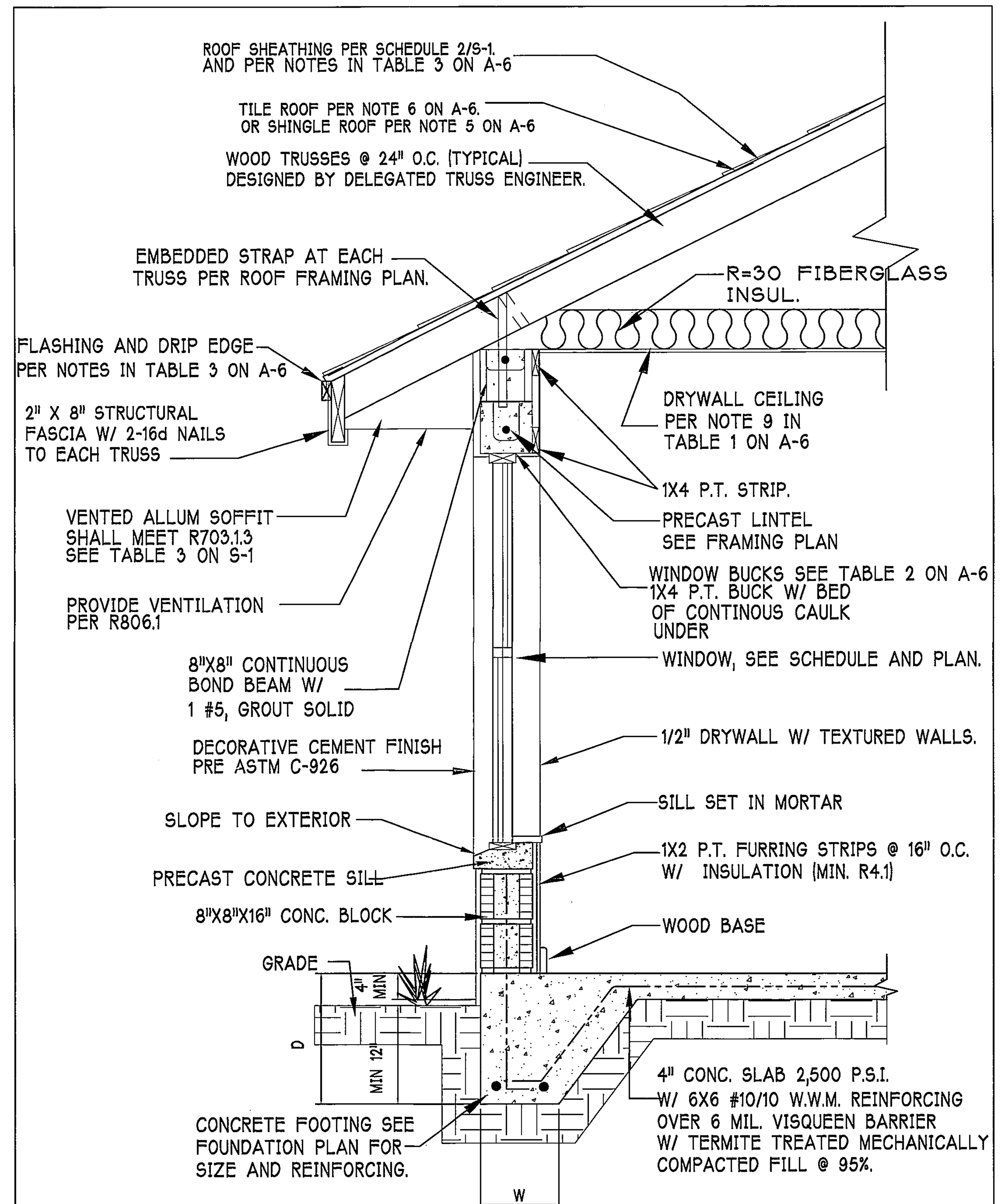

TYPICAL WALL SECTION

SCALE: 3/4"= 1'-0"

2

REVIEWED FOR CODE COMPLIANCE CAPE CORAL BUILDING DIVISION
BY [signature] DATE 8/1/17
ALL CONSTRUCTION SHALL BE IN COMPLIANCE WITH THE FLORIDA BUILDING CODE, ALL STATE AND LOCAL CODES. THE GRANTING OF A PERMIT DOES NOT RELIEVE THE CONTRACTOR OF RESPONSIBILITY TO COMPLY WITH ALL CODES AND ORDINANCES

DESIGN IN ACCORDANCE WITH THE FLORIDA BUILDING CODE 2010

D.R.HORTON · America's Builder

Gulf Coast Drafting & Design
Phone (239) 540-1822
Fax (239) 540-7759

This signature and seal is for work performed by the Structural Engineer of Record (SER) related to Structural Engineering only. No work was performed by the SER in other disciplines such as architectural, mechanical, plumbing, electrical, fire, life safety, accessibility, energy, site work, civil, or geotechnical.

STRUCTURAL ENGINEERING
STRUCTURAL SYSTEMS OF NORTH FLORIDA
1634 S.E. 47th ST. SUITE #3
CAPE CORAL, FL 33904
(239) 549-4554
CA# 8829
DEREK BERGENER P.E.
JUL 2 3 2014
FL PE #58552

LOT: 15 BLOCK : 7007
SUBDIV: CELEBRATION CAPE
ADDRESS: 211 DESTINY CIRCLE
G.C.D. JOB # : 7977

MODEL: UNIT 1983
RESIDENCE FOR: SPEC

DATE:	7-22-14
DRAWN BY:	GCH
CHECKED BY:	JWC
REVISED:	
PLAN:	SECTIONS
SCALE:	AS NOTED
SHEET#	A-6

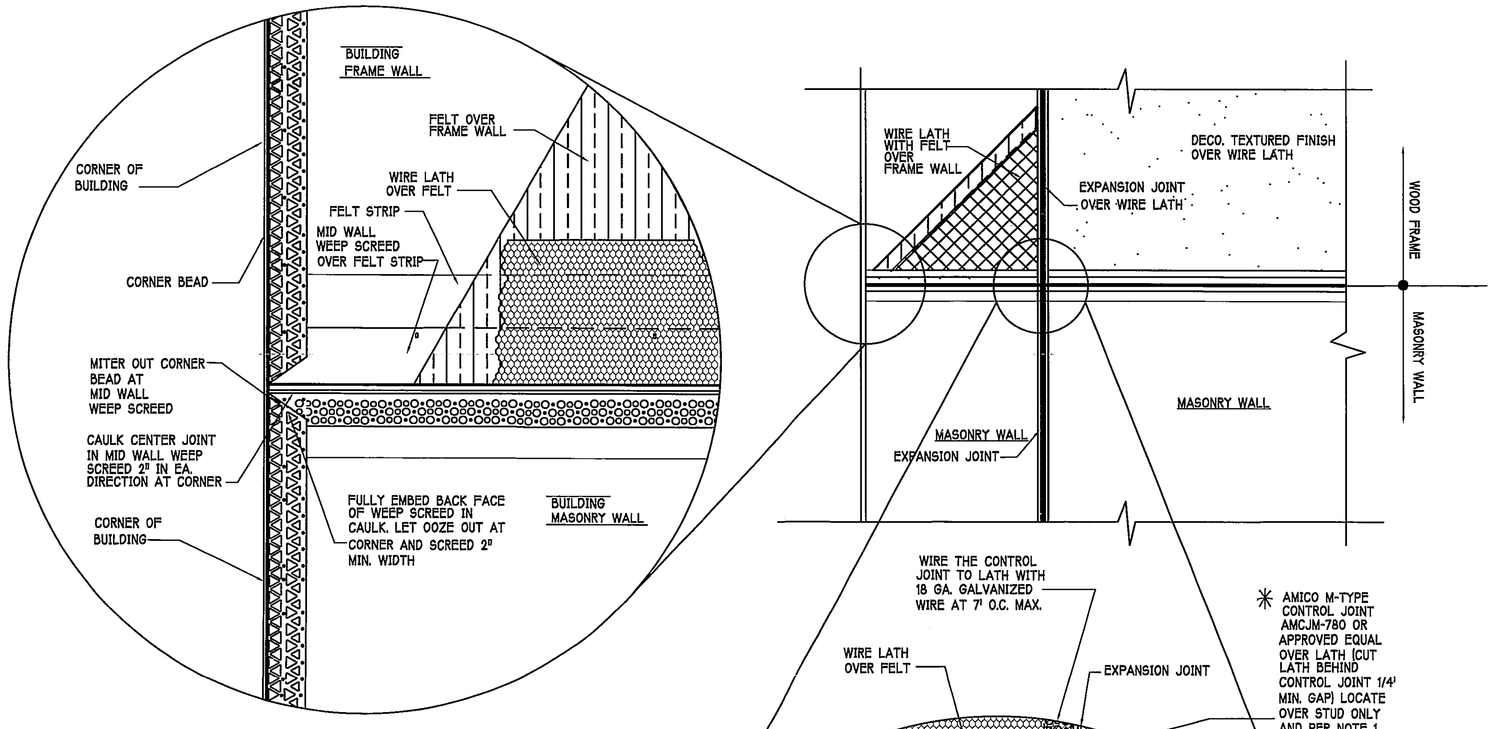

MID WALL WEEP SCREED DETAIL

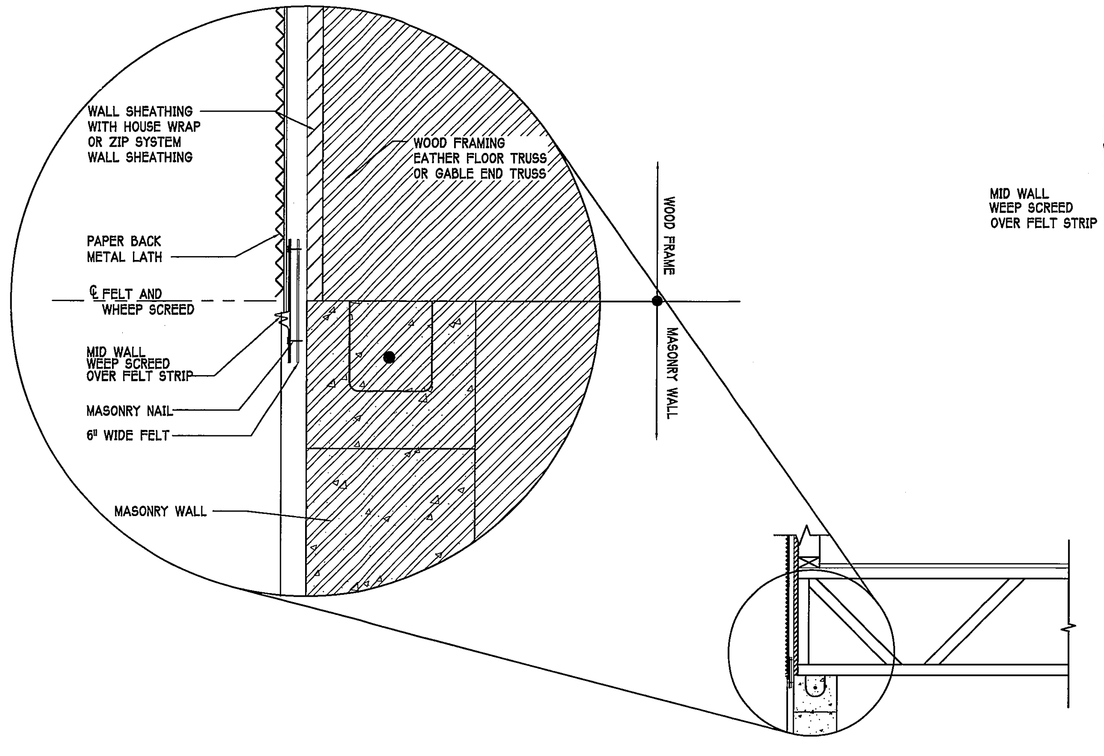

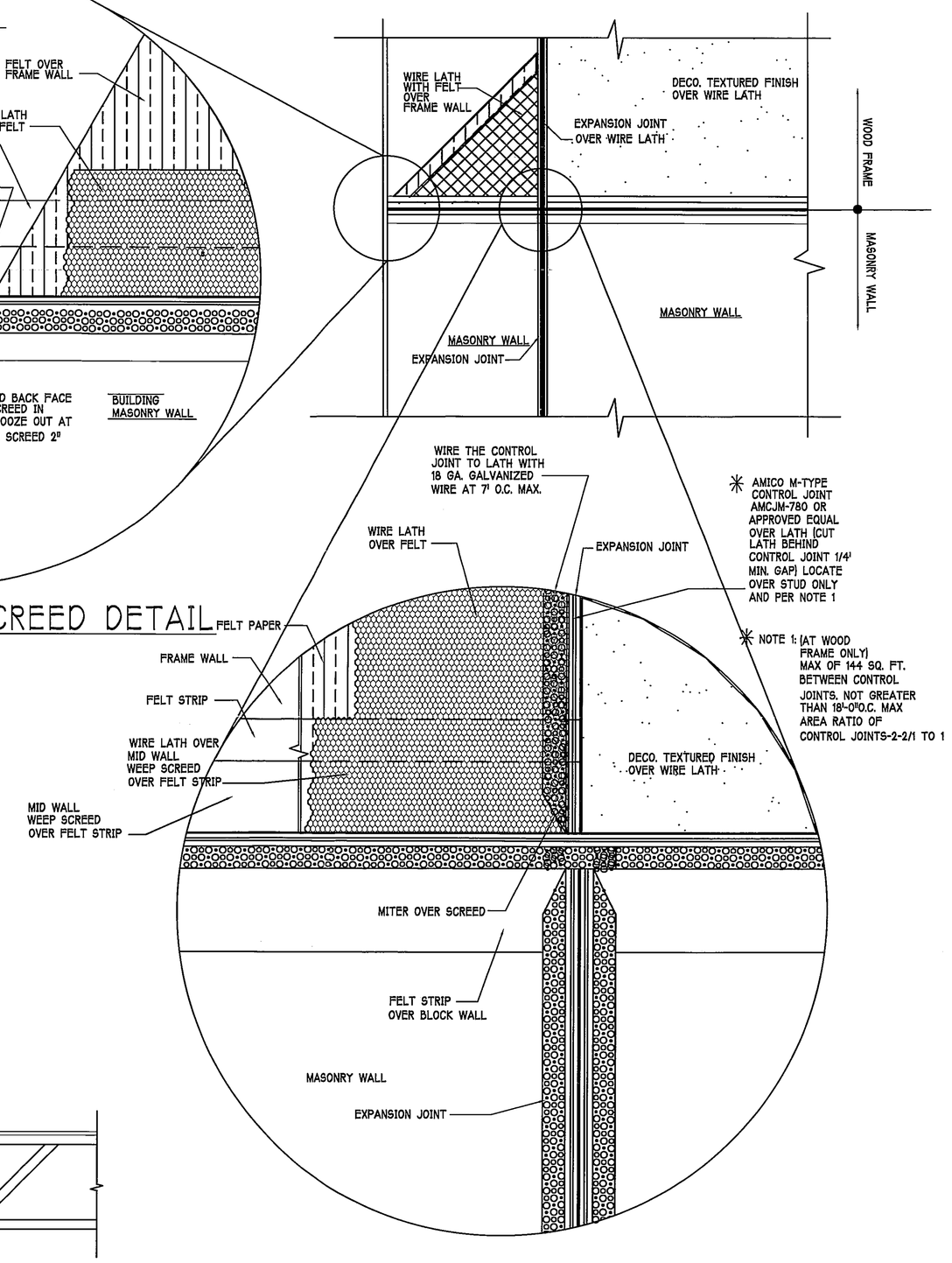

WEEP SCREED DETAIL

INSTALL AT ALL EXTERIOR WALL LOCATIONS WHERE WOOD STUD FRAMING IS ABOVE MASONRY WALLS.

REVIEWED
FOR CODE COMPLIANCE
CAPE CORAL BUILDING DIVISION
BY K. Ves DATE 7.29.14
ALL CONSTRUCTION SHALL BE IN COMPLIANCE WITH THE FLORIDA BUILDING CODE, ALL STATE AND LOCAL CODES. THE GRANTING OF A PERMIT DOES NOT RELIEVE THE CONTRACTOR OF RESPONSIBILITY TO COMPLY WITH ALL CODES AND ORDINANCES

DESIGN IN ACCORDANCE WITH THE FLORIDA BUILDING CODE 2010

D·R·HORTON America's Builder

Gulf Coast Drafting & Design
Phone (239) 540-1822
Fax (239) 540-7759

LOT: 15 BLOCK: 7007
SUBDIV: CELEBRATION CAPE
ADDRESS: 211 DESTINY CIRCLE
G.C.D. JOB #: 7977

MODEL: UNIT 1983
RESIDENCE FOR: SPEC

DATE: 7-22-14
DRAWN BY: GCH
CHECKED BY: JWC
REVISED:
PLAN: BANDING DETAILS
SCALE: N.T.S.
SHEET# A-7

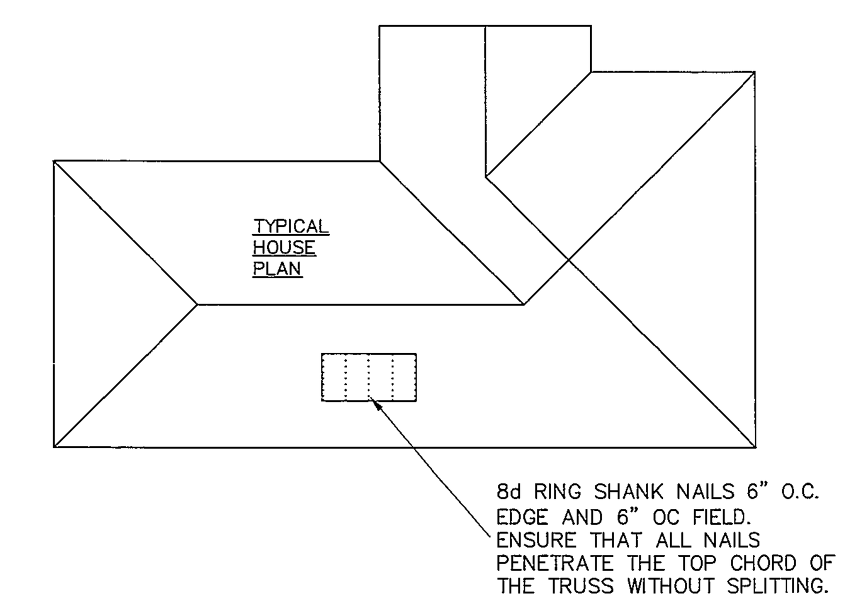

1 ROOF DECK NAILING PATTERN
SCALE: NTS

SHEATHING SCHEDULE	
EXTERIOR STUD WALL	FLOOR
7/16" ZIP SYSTEM WALL SHEATHING BY HUBER ENGINEERED WOODS LLC, NAILED W/ 8d COMMON WIRE @ 6" O.C. EDGE AND 6" O.C. FIELD. PROVIDE 2x4 BLOCKING AT ALL JOINTS. INSTALL SHEATHING AND SEAM TAPE IN STRICT ACCORDANCE WITH MFR. WRITTEN INSTRUCTIONS.	N/A
ROOF	LANAI / ENTRY CEILING
A.P.A. RATED SHEATHING, EXPOSURE 1, SPAN RATING 24/16 OR BETTER (HIGHER NUMBERS INDICATE BETTER SPAN RATING). THE USUAL CHOICE IS 15/32" CDX PLYWOOD OR 7/16" OSB, WITH THE REQUIRED APA GRADE MARKING. FASTEN WITH 8d RING SHANK NAILS @ 6" O.C. EDGE AND 6" O.C. FIELD. (RING SHANK NAILS PER R803.2.3.1: 0.113" NOMINAL SHANK DIAMETER, RING DIA. OF 0.012" OVER SHANK DIAMETER, 16 TO 20 RINGS PER INCH, 0.280" DIAMETER FULL ROUND HEAD, 2" NAIL LENGTH)	OPTIONS: 1) 1x4 STRIPPING @ 16"OC w/ 2–8d NAILS TO EACH TRUSS, 5/8" EXTERIOR GYPBOARD CEILING, FASTEN w/8d NAILS OR 1 5/8" DRYWALL SCREWS @ 6"OC EDGE & FIELD. 2) 3/8" BC PLYWOOD NAILED w/ 6d COMMON @ 6" OC EDGE & FIELD. 3) WIRE LATHE AND 1/2" STUCCO. FASTEN WIRE LATHE WITH GALVANIZED STAPLES BY SENCO OR EQUIV., 1" CROWN, 1" LONG, SPACED 4" OC.

NOTE: EXTERIOR CEILINGS AND SOFFITS SPECIFIED HERE MEET THE DESIGN WIND PRESSURES PER R703.1.3.

2

WINDOW/DOOR/SOFFIT DESIGN WIND PRESSURES
WIND PRESSURES PER ASCE7–10, 160 MPH, EXPOSURE B, AND CONVERTED TO ALLOWABLE STRESS DESIGN PRESSURES USING 0.6W LOAD FACTOR. (Vasd=124 MPH, RISK CAT II, ENCLOSED, kd=0.85, h<30')

TYPE	INTERIOR ZONE 4		END ZONE 5	
SOFFIT	+27.7	–30.0	+27.7	–37.0
TYPICAL WINDOWS & DOORS	+27.7	–30.0	+27.7	–37.0
8' OR 9' GARAGE DOORS		+24.3	–27.5	
16' OR 18' GARAGE DOORS		+23.3	–26.0	

(SEE PLAN FOR OTHER SPECIFIC PRESSURES)

1) TABLE MAY BE USED FOR ANY SIZE WINDOW OR DOOR IN EACH TYPE.
2) USE "INTERIOR ZONE 4" PRESSURES UNLESS WINDOW OR DOOR IS LOCATED WITHIN THE "END ZONE 5" (SEE DIAGRAM BELOW), THEN USE THE HIGHER PRESSURES UNDER THE "END ZONE 5" COLUMN.
3) ALL GLASS / GLAZING SHALL BE IMPACT RATED OR USE IMPACT RATED SHUTTERS.
4) SUBMIT PRODUCT APPROVALS TO THE BUILDING DEPARTMENT AS REQUIRED BY THE LOCAL JURISDICTION.
5) MANUFACTURED SOFFIT PRODUCTS SHALL BE INSTALLED PER MFR ENGINEERING SPEC SHEETS.

* ON IRREGULAR SHAPED BUILDINGS, THERE IS NO GUIDANCE IN THE CODE FOR HOW FAR A CORNER MUST PROTRUDE FROM THE MAIN BUILDING TO BE CONSIDERED 'ZONE 5'. WE HAVE CHOSEN >15'. THIS IS SUBJECT TO JUDGEMENT CALL BY THE AUTHORITY HAVING JURISDICTION.

IN ZONE 5, MANUFACTURED SOFFIT PRODUCTS MAY REQUIRE ADDITIONAL BATTONS OR FASTENING PER MFR ENGINEERING SPEC SHEETS TO MEET THE PRESSURE REQUIREMENTS.

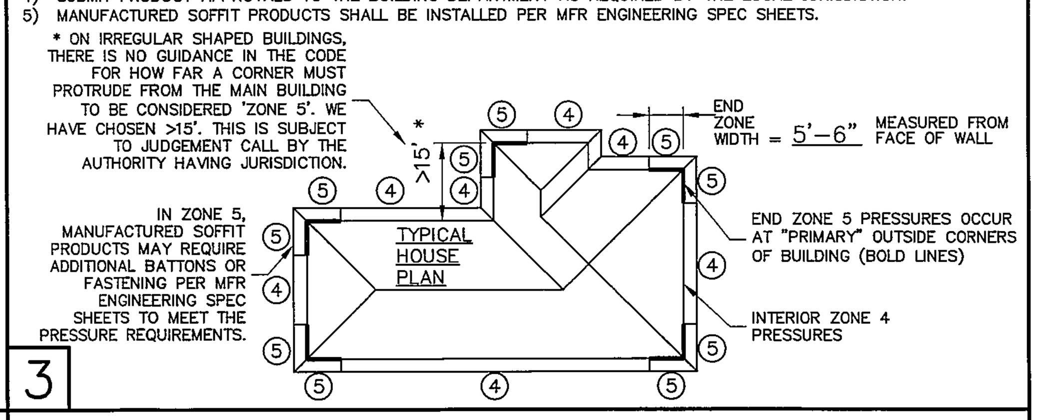

3

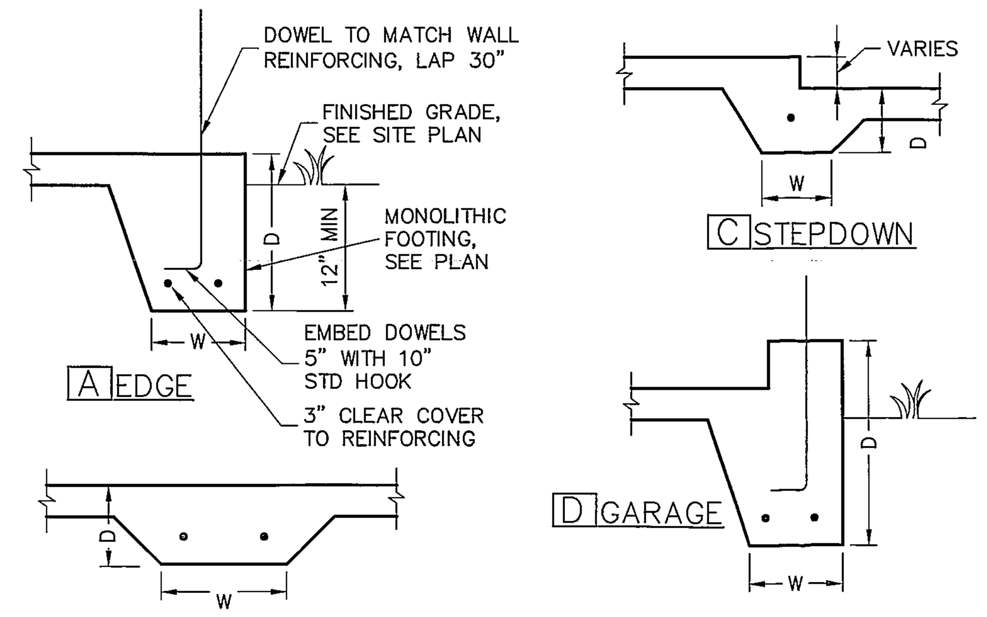

4 MONOLITHIC FOOTINGS
SCALE: 3/4" = 1'–0"

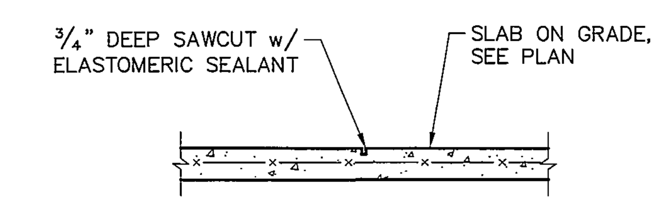

NOTES:
1) PROVIDE SAWCUTS TO CREATE APPROXIMATE 20' X 20' MAXIMUM SQUARES.
2) SAWCUT CONCRETE SLAB WITHIN 4 TO 12 HOURS OF CONCRETE PLACEMENT.

5 SLAB SAWCUT DETAIL
SCALE: NTS

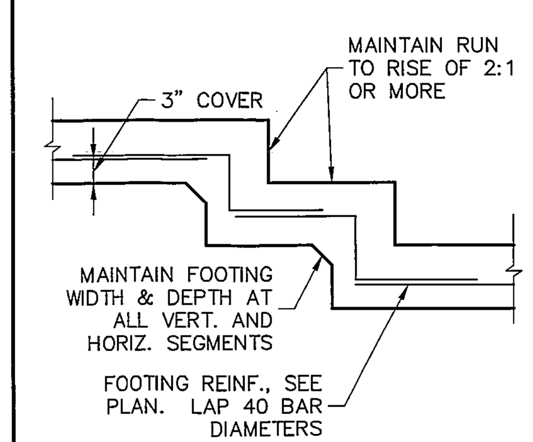

6 STEP FOOTING
SCALE: NTS

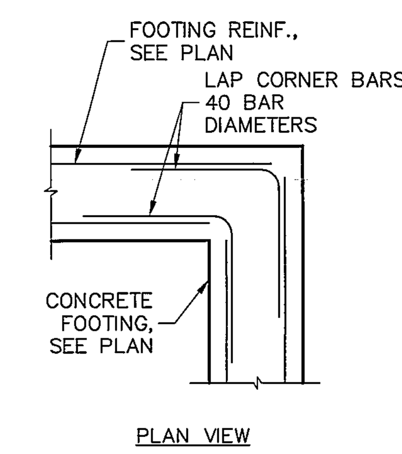

FOOTING CORNER BARS
SCALE: NTS

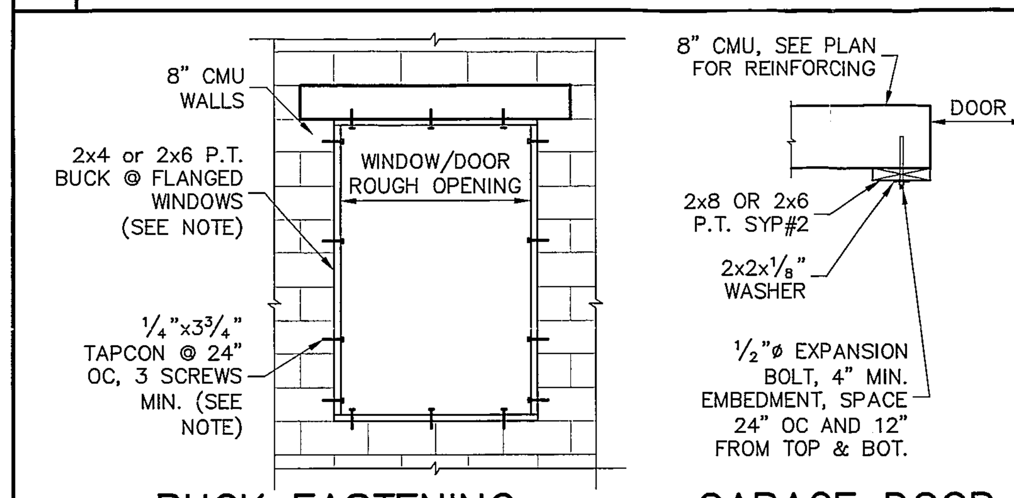

BUCK FASTENING — GARAGE DOOR

NOTE: THIS BUCK FASTENING DETAIL IS INTENDED FOR FLANGED WINDOW/DOOR PRODUCTS THAT FASTEN THRU THE FLANGE WITH WOOD SCREWS TO THE BUCK. FOR WINDOW/DOOR PRODUCTS THAT DO NOT HAVE A FLANGE AND FASTEN INSTEAD OUTWARD THRU THE FRAME, USE MASONRY SCREWS PER MFR. THAT ARE LONG ENOUGH TO PENETRATE 2–1/4" INTO THE MASONRY. IN THIS CASE, THE BUCK MATERIAL IS SIMPLY A SPACER AND MAY BE 1x4 OR 1x6 OR OMITTED ENTIRELY AND THE SPACER MAY BE TACKED IN PLACE WITH MASONRY NAILS OR PINS.

7

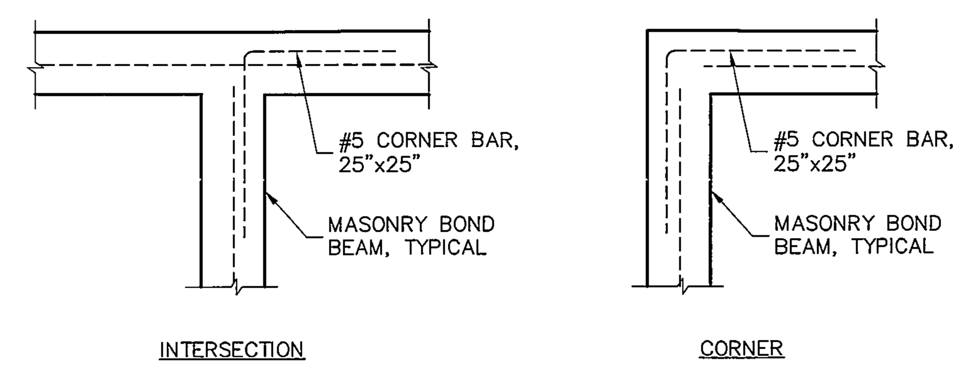

8 CORNER BAR DETAIL IN BOND BEAMS
SCALE: 3/4" = 1'–0"

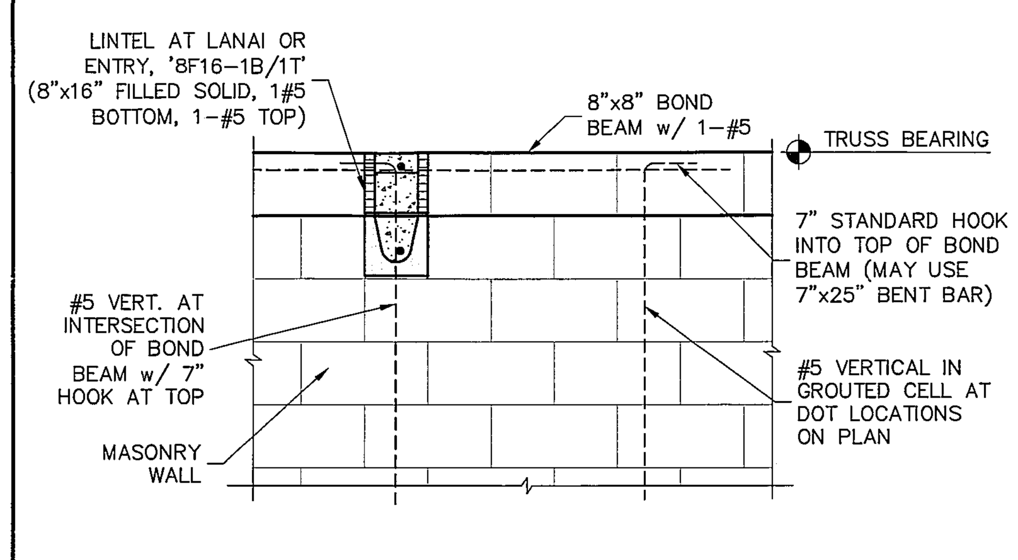

9 BOND BEAM REINFORCING DETAIL
SCALE: 3/4" = 1'–0"

RETROFIT STRAPS TO CONCRETE/MASONRY		
TRUSS UPLIFT (LBS) @ 24" OC	CONNECTOR	
TO 840	1–MTSM16 or 20	7–10dx1 1/2", 4–1/4x2 1/4 TITEN
TO 1045	1–HTSM16 or 20	8–10dx1 1/2", 4–1/4x2 1/4 TITEN
TO 2090	2–HTSM16 or 20	8–10dx1 1/2", 4–1/4x2 1/4 TITEN
TO 4300	2–LGT2	16–16d, 7–1/4"x2 1/4" TITEN
TO 3480	HTT16	18–16d, 5/8"ø ALLTHREAD, DRILL & EPOXY 10" EMBED w/ SIMPSON SET.
TO 10530	HGT–2/3	TWO 3/4"ø ALTHREAD, DRILL & EPOXY 12" EMBED WITH SIMPSON SET.

NOTES:
1) WHERE EMBEDDED STRAP IS MISSING OR MIS–LOCATED, PROVIDE A STRAP FROM THE ABOVE LIST AT EACH ROOF TRUSS BEARING POINT, BASED ON THE TRUSS UPLIFT VALUES IN THE SIGNED AND SEALED TRUSS DESIGN PACKAGE.
2) CONNECTORS ARE SIMPSON STRONG TIE. ALL CONNECTORS SHALL BE INSTALLED IN STRICT ACCORDANCE WITH SIMPSON PRINTED INSTRUCTIONS.

10 RETROFIT UPLIFT CONNECTOR SCHEDULE

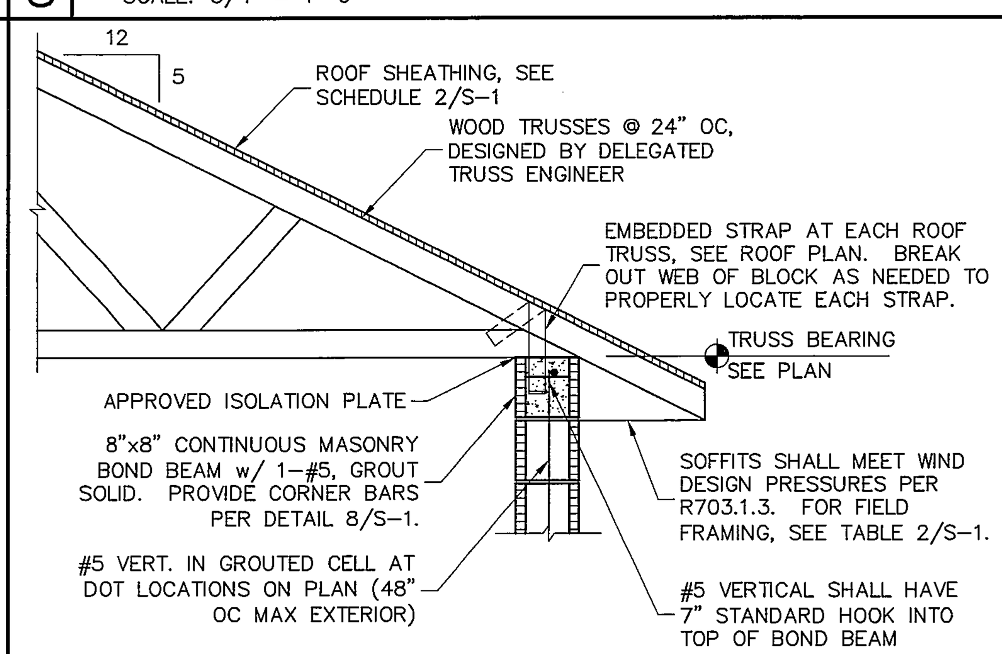

11 TRUSS STRAP TO BOND BEAM
SCALE: 3/4" = 1'–0"

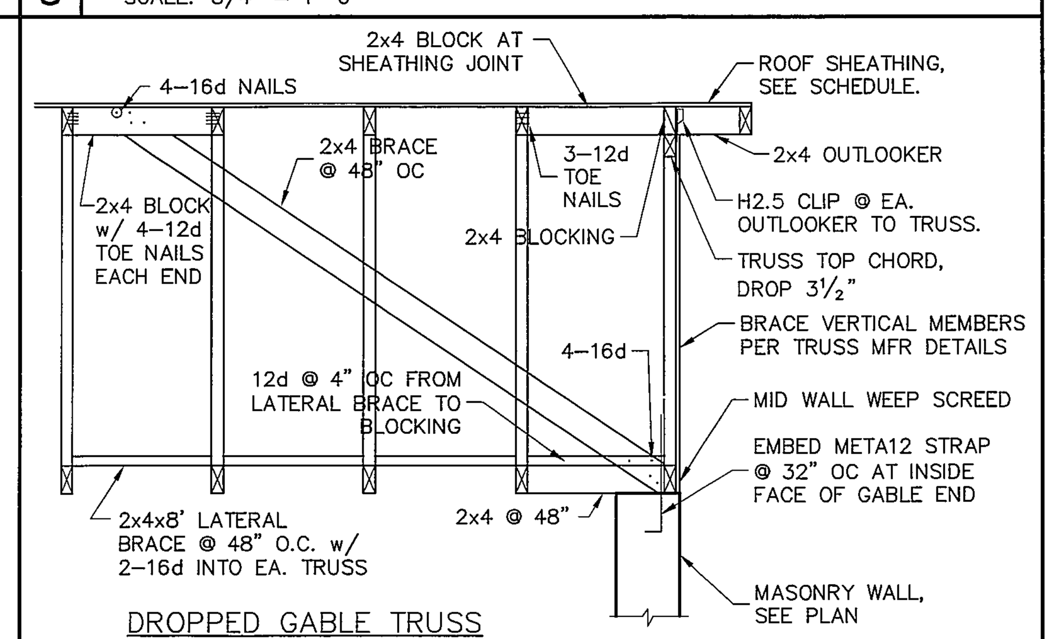

12 GABLE END BRACING
SCALE: N.T.S.

THIS DETAIL NOT USED ON ELEVATION A

DESIGN CRITERIA:

DESIGN IN ACCORDANCE WITH REQUIREMENTS OF THE FLORIDA BUILDING CODE 2010 – RESIDENTIAL.

1. FLOOR & ROOF UNIFORM LOADS:
   - ELEVATED FLOORS: LIVE LOAD 40 PSF, DEAD LOAD 20 PSF
   - ROOF: LIVE TOP CHORD 20 PSF
     - LIVE BOTTOM CHORD 10 PSF (NON–CONCURRENT w/ TCLL)
     - CEMENT ROOF TILE DEAD LOAD 25 PSF TOTAL
     - SHINGLE/METAL ROOFING DEAD LOAD 15 PSF TOTAL
     - MINIMUM DEAD LOAD FOR WIND: TC 5 PSF, BC 5 PSF
   - DEFLECTION CRITERIA:
     - FLOOR L/480 LIVE, L/360 TOTAL
     - ROOF L/240 LIVE, L/180 TOTAL

2. WIND LOADS:
   WIND DESIGN PER ASCE7–10
   - BASIC WIND SPEED (ASCE7–10) 160 MPH
   - NOMINAL WIND SPEED (Vasd TABLE R301.2.1.3) 124 MPH
   - BUILDING CATEGORY II
   - IMPORTANCE FACTOR 1.00
   - EXPOSURE B
   - MEAN ROOF HEIGHT < 30 FT
   - ROOF PITCH 5/12
   - ENCLOSURE CLASS. ENCLOSED
   - INTERNAL PRES. COEFF. +/– 0.18

   WINDOW/DOOR DESIGN WIND PRESSURE, SEE TABLE IN DETAIL 3. SOFFITS – PER R703.1.3, ALL SOFFITS SHALL BE CAPABLE OF RESISTING THE DESIGN PRESSURES SPECIFIED IN TABLE R301.2(2) FOR WALLS. PER R616.4, SOFFIT TESTING SHALL USE ASCE7 DESIGN PRESSURES USING 0.6W LOAD FACTOR.

3. REINFORCED CONCRETE:
   DESIGN AS PER ACI 318–08
   - REQUIRED COMPRESSIVE STRENGTH AT 28 DAYS:
     - SLAB ON GRADE f'c = 2500 PSI
   - 3 1/2" MINIMUM THICKNESS REINFORCED WITH 6x6 w1.4xw1.4 WWF OR FIBERMESH.
     - CONVENTIONAL SHALLOW FOOTINGS f'c = 2500 PSI
     - BEAMS AND COLUMNS f'c = 3000 PSI
     - ALL OTHER CONCRETE (U.N.O.) f'c = 3000 PSI

   UNLESS OTHERWISE SHOWN ON DRAWINGS, MINIMUM CONCRETE COVER FOR REINFORCING SHALL BE AS FOLLOWS:
   - FOOTINGS 3"
   - SLAB ON GRADE CENTERED
   - BEAMS 1 1/2"
   - COLUMNS 1 1/2"

   ALL REINFORCING STEEL SHALL BE PLACED IN ACCORDANCE WITH THE TYPICAL BENDING DIAGRAMS AND PLACING DETAILS OF ACI STANDARDS AND SPECIFICATIONS. ALL REINFORCING STEEL SHALL BE HELD SECURELY IN POSITION WITH STANDARD ACCESSORIES DURING PLACING OF CONCRETE.
   - REINFORCING STEEL – ASTM A615 GRADE 40 FOR #3, GRADE 60 FOR #4 TO #11

   WELDED WIRE FABRIC – ASTM A185

   SPLICES IN REINFORCING, SHALL BE 40 BAR DIAMETERS. NON–CONTACT LAP SPLICES MAY BE USED PROVIDED REINFORCING IS NOT SPACED MORE THAN 5" APART FOR #5 BARS.

   FORMWORK AND SHORING SHALL REMAIN IN PLACE UNTIL CONCRETE HAS REACHED AT LEAST 2/3 OF THE REQUIRED 28 DAY STRENGTH.

4. REINFORCED MASONRY:
   DESIGN PER ACI 530–08
   - REQUIRED COMPRESSIVE STRENGTHS:
     - MASONRY WALLS f'm = 1500 PSI

   REINFORCING STEEL – ASTM A615 GRADE 60. SPLICES IN REINFORCING, SHALL BE 48 BAR DIAMETERS. ALL CONCRETE MASONRY UNITS SHALL BE COMPOSED OF ASTM C90, GRADE N–1 HOLLOW CONCRETE MASONRY UNITS WITH TYPE 'S' MORTAR. GROUT ALL CELLS CONTAINING VERTICAL REINFORCEMENT WITH 3000 PSI PEA ROCK CONCRETE GROUT. ALL CELLS BELOW FINISHED GRADE SHALL BE GROUTED SOLID. ALL EXTERIOR WALLS SHALL BE REINFORCED FULL HEIGHT AT DOT LOCATIONS ON PLAN. PROVIDE HORIZONTAL JOINT REINFORCEMENT IN WALLS AT 16" OC VERTICALLY, UNLESS NOTED OTHERWISE. IN ADDITION, INSTALL JOINT REINFORCING IN THE FIRST TWO MORTAR JOINTS ABOVE AND BELOW OPENINGS, EXTENDING AT LEAST 24" BEYOND THE OPENING. LAP JOINT REINFORCING 6" MINIMUM.

5. DELEGATED–ENGINEERED WOOD ROOF & FLOOR TRUSSES:
   ALL WOOD ROOF AND FLOOR TRUSSES SHALL BE DESIGNED BY A DELEGATED TRUSS ENGINEER PER RULE 61G15–31.003 OF THE FLORIDA ADMINISTRATIVE CODE. ALL TRUSSES SHALL HAVE TEMPORARY BRACING PER "COMMENTARY AND RECOMMENDATIONS FOR HANDLING, INSTALLING AND BRACING METAL PLATE CONNECTED WOOD TRUSSES, HIB–91." FOR OTHER BRACING REQUIREMENTS, NOTIFY ENGINEER. PROVIDE PERMANENT BRACING PER TRUSS MFR. SHOP DRAWINGS. IF PERMANENT BRACING IS NOT SPECIFIED, CONTACT ENGINEER.

6. FOUNDATION:
   CONVENTIONAL SHALLOW CONCRETE FOOTINGS
   - SOIL BEARING CAPACITY 2000 PSF

   THE CONTRACTOR SHALL BE RESPONSIBLE FOR DETERMINING THE SUITABILITY OF THE SOIL CONDITIONS FOR THE INTENDED STRUCTURE AND ASSUMED SOIL BEARING CAPACITY. IT IS RECOMMENDED THAT A GEOTECHNICAL FIRM BE HIRED TO PERFORM A SITE EVALUATION.

7. DIMENSIONS: VERIFY ALL DIMENSIONS WITH HOUSE PLANS. SEE HOUSE PLANS, MECHANICAL, ELECTRICAL AND PLUMBING DRAWINGS FOR EMBEDS, OPENINGS, SLEEVES, ETC. WHICH ARE NOT SHOWN ON STRUCTURAL DRAWINGS.

8. MEANS AND METHODS: THE STRUCTURAL ENGINEER SHALL NOT HAVE CONTROL OR BE RESPONSIBLE FOR CONSTRUCTION MEANS, METHODS, TECHNIQUES, PROCEDURES, OR SEQUENCES TEMPORARY BRACING, SHORING, GUYING OR OTHER MEANS TO SUPPORT STRUCTURAL ELEMENTS IN PLACE DURING CONSTRUCTION. FOR THE ACTS OR OMISSIONS OF THE CONTRACTOR, OR ANY OTHER PERSONS PERFORMING THE WORK OR FOR THE FAILURE OF ANY OF THEM TO CONSTRUCT THE WORK IN ACCORDANCE WITH THE CONTRACT DOCUMENTS.

9. SHOP DRAWINGS: SHOP DRAWINGS SHALL BE PREPARED AND SUBMITTED TO THE ENGINEER FOR REVIEW FOR ALL STRUCTURAL ELEMENTS UTILIZING PREFABRICATED COMPONENTS. ONE SET OF SIGNED & SEALED TRUSS ENGINEERING SHALL BE DELIVERED TO THE ENGINEER OF RECORD FOR THE STRUCTURE PER FLORIDA ADMINISTRATIVE CODE 61G15–30.005 AND 61G15–31.003.

REVIEWED FOR CODE COMPLIANCE CAPE CORAL BUILDING DIVISION DATE 8/1/14
ALL CONSTRUCTION SHALL BE IN COMPLIANCE WITH THE FLORIDA BUILDING CODE, ALL STATE AND LOCAL CODES. THE GRANTING OF A PERMIT DOES NOT RELIEVE THE CONTRACTOR OF RESPONSIBILITY TO COMPLY WITH ALL CODES AND ORDINANCES

FOR SCOSTA TRUSSES, ELEVATION B, 3 CAR GARAGE, JOB # 4422383, DATED: 06/26/14, REVISED: NONE

DESIGN PER FLORIDA BUILDING CODE 2010

STRUCTURAL DETAILS FOR MODEL 1983 B w/ 3 CAR GARAGE

211 DESTINY CIRCLE
CAPE CORAL, FLORIDA
LOT: 15 SUBDIVISION: CELEBRATION CAPE

D·R·HORTON America's Builder

DEREK DERGENER P.E.
JUL 23 2014
FL PE #58552

STRUCTURAL ENGINEERING:
STRUCTURAL SYSTEMS OF NORTH FLORIDA
1634 S.E. 47th STREET, SUITE #3
CAPE CORAL, FL 33904
(239) 549–4554
CA# 8829

REVISIONS	BY

DESIGN/DRAWN	DWB/DWB
CHECKED	DWB
DATE	07/22/14
SCALE	AS NOTED
JOB NO.	DR7977
SHEET	S–1

SHEET 1 OF 2

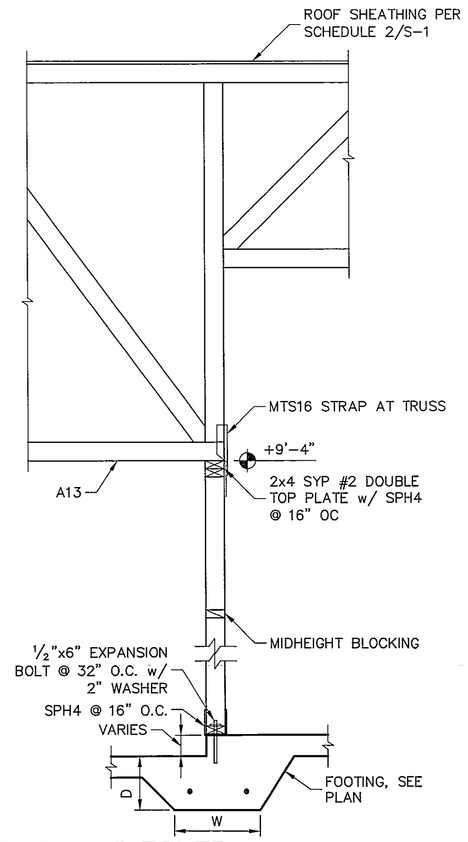

1 SECTION AT FOYER
SCALE: 3/4" = 1'-0"

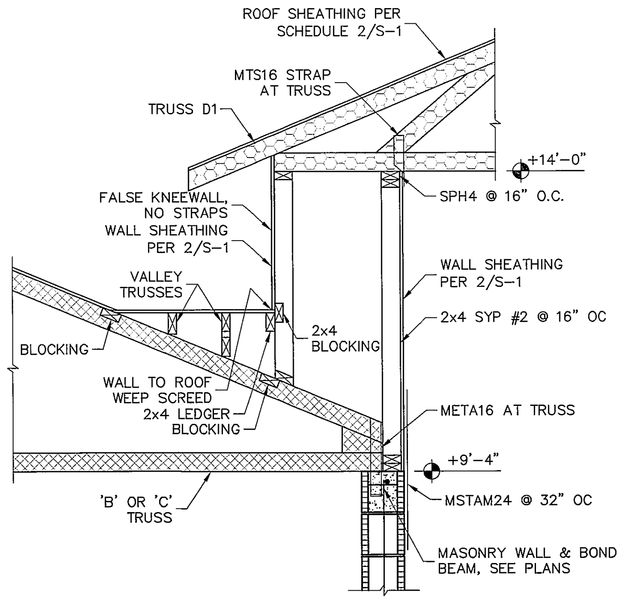

2 KNEEWALL @ ENTRY
SCALE: 3/4" = 1'-0"

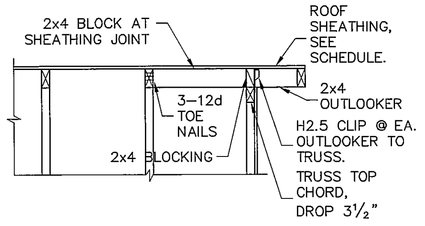

3 OUTLOOKER DETAIL
SCALE: N.T.S.

THIS DETAIL USED FOR 3rd CAR GARAGE OPTION

REVIEWED FOR CODE COMPLIANCE CAPE CORAL BUILDING DIVISION
BY ____ DATE 7/21/14
NOTE: CONSTRUCTION SHALL BE IN COMPLIANCE WITH THE FLORIDA BUILDING CODE, ALL STATE AND LOCAL CODES. THE GRANTING OF A PERMIT DOES NOT RELIEVE THE CONTRACTOR OF RESPONSIBILITY TO COMPLY WITH ALL CODES AND ORDINANCES

FOR SCOSTA TRUSSES, ELEVATION B, 3 CAR GARAGE. JOB # 4422383, DATED: 06/26/14, REVISED: NONE

REVISIONS	BY

STRUCTURAL ENGINEERING:
STRUCTURAL SYSTEMS OF NORTH FLORIDA
1634 SE 47th STREET, SUIT B
CAPE CORAL, FLORIDA 33904
(239) 549-4554
CA# 8829

DERRICK WISSENER P.E.
JUL 23 2014
FL PE #50552

D.R.HORTON America's Builder

DESIGN PER FLORIDA BUILDING CODE 2010

STRUCTURAL DETAILS FOR MODEL 1983 B w/ 3 CAR GARAGE

211 DESTINY CIRCLE
CAPE CORAL, FLORIDA
LOT: 15 SUBDIVISION: CELEBRATION CAPE

DESIGN/DRAWN	DWB/DWB
CHECKED	DWB
DATE	07/22/14
SCALE	AS NOTED
JOB NO.	DR7977
SHEET	S-2

SHEET 2 OF 2