TECHNICAL REQUIREMENTS

1. DESIGN AND MANUFACTURE: API 600 or API 6D
2. FACE TO FACE: ASME / ANSI B16.10
3. END FLANGE DIMENSIONS: ASME / ANSI B16.5
4. PRESSURE-TEMP: ASME / ANSI B16.34
5. PRESSURE TEST: API 598

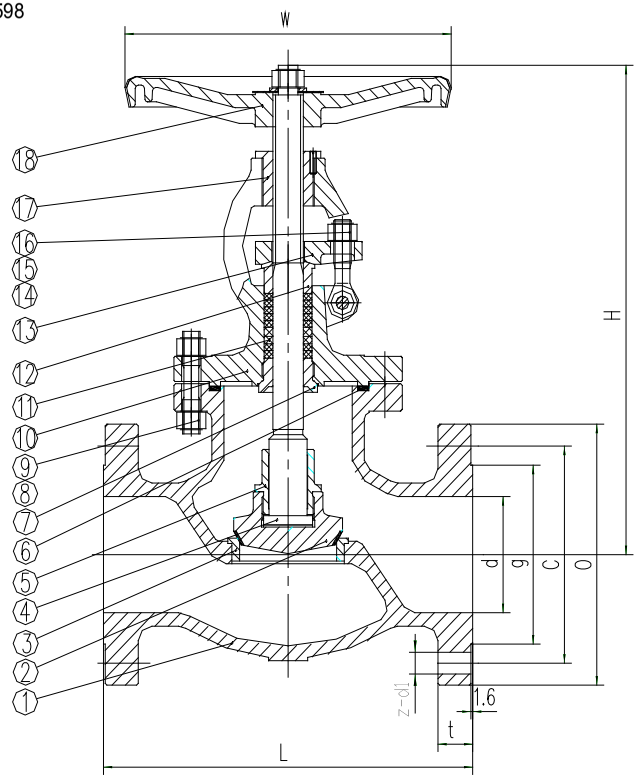

NO	PART NAME	MATERIAL
1	BODY	A216 WCB
2	DISC	A105+13Cr
3	SEAT	A105+STL
4	STEM	A182 F6
5	DISC NUT	A182 F6
6	GASKET	A182 F304 + Graphite
7	BACK SEAT	A182 F6
8	BONNET BOLT	A193 B7
9	BONNET NUT	A194 2H
10	BONNET	A216 WCB
11	STEM PACKING	Flexible Graphite
12	GLAND	A182 F6
13	GLAND FLANGE	A216 WCB
14	PIN	Carbon Steel or Alloy Steel
15	GLAND NUT	A194 B7
16	GLAND EYEBOLT	A194 2H
17	STEM NUT	ZCuAl10Fe3
18	HAND WHEEL	KTH300-06

	GENERAL DIMENSIONS				FLANGE DIMENSIONS				
SIZES	d	H	W	L	O	C	g	t	Z-d1
25NB CLASS 300	25	370	200	203	124	89	51	18	4 - 19
40NB CLASS 300	40	385	200	229	156	114.5	73	21	4 - 22
50NB CLASS 300	51	390	200	267	165	127	92	23	8 - 19
65NB CLASS 300	64	425	250	292	190	149	105	26	8 - 22
80NB CLASS 300	76	450	250	318	210	168.5	127	29	8 - 22
100NB CLASS 300	102	565	350	356	254	200	157	32	8 - 22
125NB CLASS 300	127	673	450	400	279	235	186	35	8 - 22
150NB CLASS 300	152	710	450	444	318	270	216	37	12 - 22
200NB CLASS 300	203	860	550	559	381	330	270	42	12 - 25
250NB CLASS 300	254	1100	GEAR OPERATED	622	445	387.5	324	48	16 - 29
300NB CLASS 300	305	1320		711	521	451	381	51	16 - 32
350NB CLASS 300	337	1450		787	533	476	413	54	20 - 32
400NB CLASS 300	387	1750		914	597	540	470	58	20 - 35

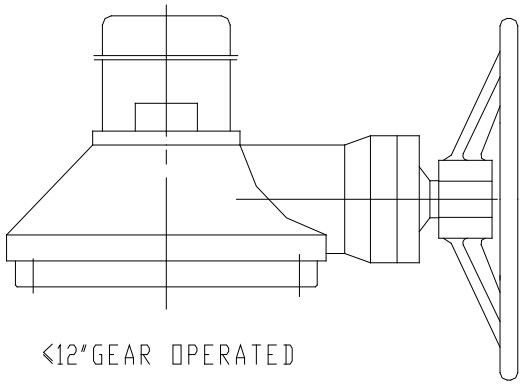

REV A	**AUSTRALIAN VALVE & ENGINEERING**	
DATE	MAY 2005	**GL300**
SCALE	TO FIT	
	WCB GLOBE VALVE OS&Y CLASS 300 RF	